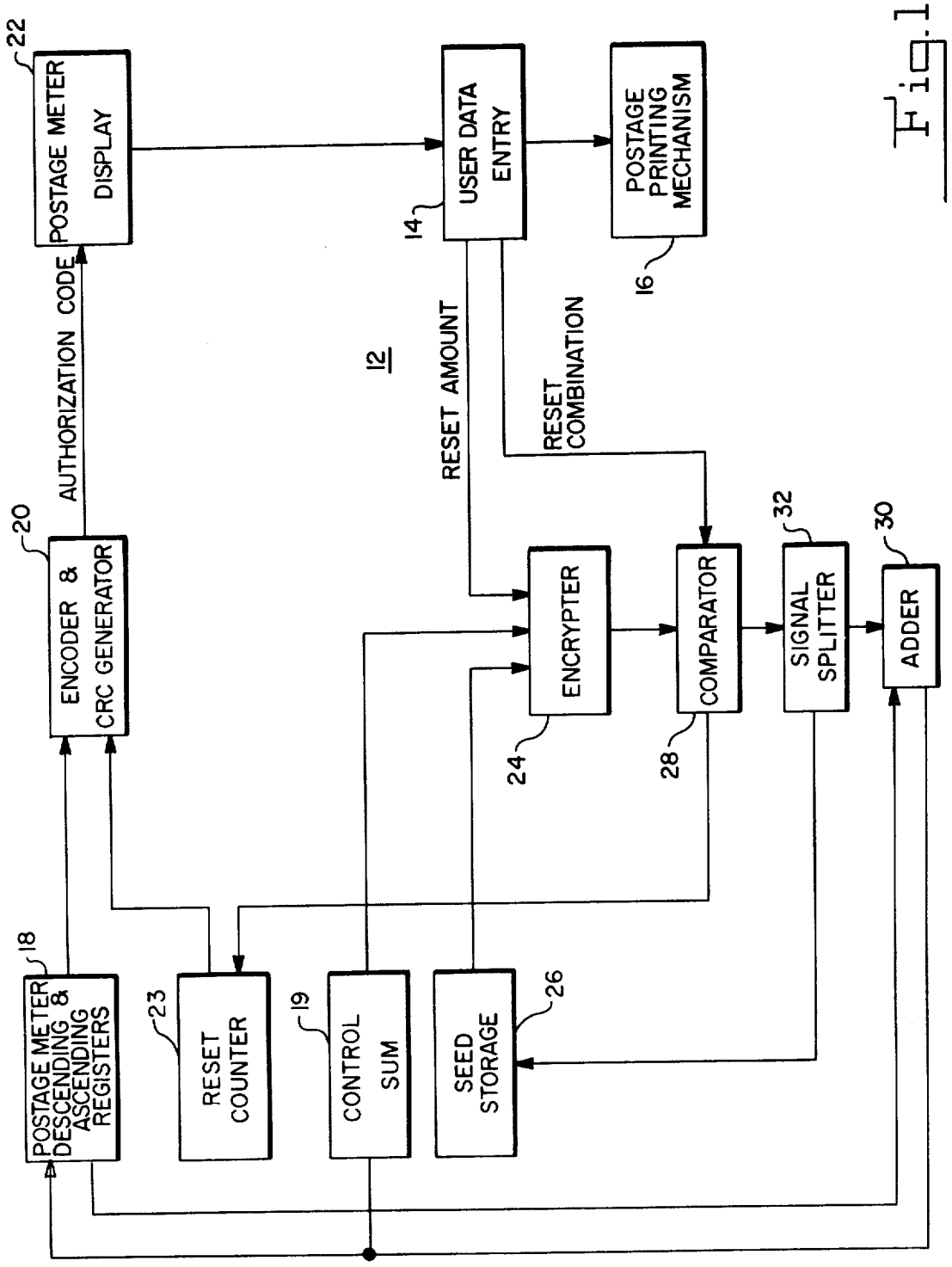
POSTAGE METER DISPLAY
22
USER DATA ENTRY
14
POSTAGE PRINTING MECHANISM
16
AUTHORIZATION CODE
12
RESET AMOUNT
RESET COMBINATION
ENCODER & CRC GENERATOR
20
ENCRYPTER
24
COMPARATOR
28
SIGNAL SPLITTER
32
ADDER
30
POSTAGE METER DESCENDING & ASCENDING REGISTERS
18
RESET COUNTER
23
CONTROL SUM
19
SEED STORAGE
26

Fig. 1