US005247899A

United States Patent [19]

Boesser

[11] **Patent Number: 5,247,899**

[45] **Date of Patent: Sep. 28, 1993**

[54] **RAMP AND PLATFORM HARBOR ACCESS SYSTEM**

[76] Inventor: **Sara L. Boesser**, 9365 View Dr., Juneau, Ak. 99801

[21] Appl. No.: **893,537**

[22] Filed: **Jun. 4, 1992**

[51] **Int. Cl.**[5] **B63B 35/44**

[52] **U.S. Cl.** **114/263**; 405/219

[58] **Field of Search** 114/263, 362; 405/219, 405/220, 221; 14/27, 28, 71.1

[56] **References Cited**

U.S. PATENT DOCUMENTS

2,510,948	6/1950	Beretta	14/27
2,618,124	11/1952	Holsten	61/48
2,948,121	8/1960	Karst	61/48
3,074,241	1/1963	Cahill et al.	61/67
3,686,876	8/1972	Muschell	61/48
4,035,861	7/1977	Edge	114/263
4,260,293	4/1981	Peterson	405/219
4,335,981	6/1982	Akiyama et al.	405/221
4,352,597	10/1982	Kay	405/219
4,581,784	4/1986	Rousseau	14/71.1
4,838,735	6/1989	Warner	405/220
4,945,595	8/1990	Meriweather	14/71.1
4,990,029	2/1991	Hemminger	405/203
4,998,313	3/1991	Lippka et al.	114/263

FOREIGN PATENT DOCUMENTS

1041518	10/1958	Fed. Rep. of Germany	14/27
2405	1/1991	Japan	14/27

Primary Examiner—Michael S. Huppert
Assistant Examiner—Thomas J. Brahan
Attorney, Agent, or Firm—Christensen, O'Connor, Johnson & Kindness

[57] **ABSTRACT**

A shore-to-dock access system of the present invention includes an intermediate ramp **10**, a buoyant platform **12**, and a piling structure **13**. The intermediate ramp is pivotally coupled to the shore or other fixed height structure and slidably connected to the buoyant platform. The buoyant platform then connects to a dock ramp **14**, which extends to a dock **16**. The buoyant platform and dock rise and fall with the water level, but the buoyant platform comes to rest on piling support structures when the water level drops sufficiently. In this manner the intermediate ramp and the dock ramp are always kept within a maximum predetermined slope suitable for wheelchair access.
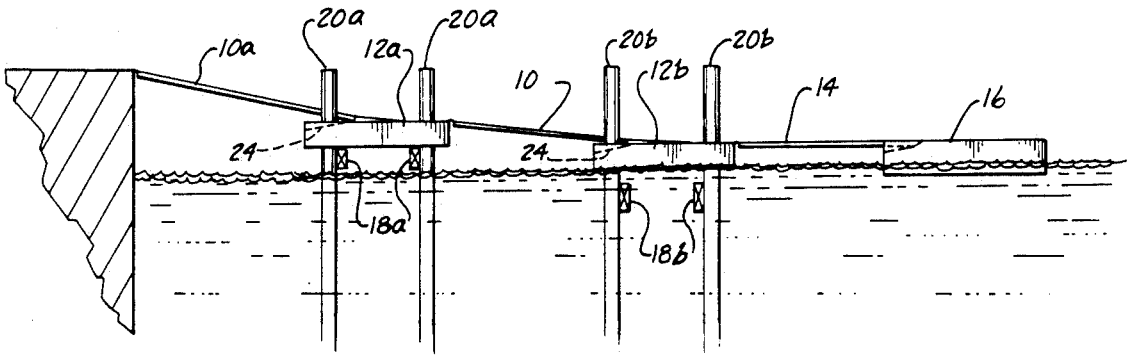
18 Claims, 4 Drawing Sheets