METHOD FOR MAKING LAMINATED CUSHIONING MATERIAL

Filed Nov. 27, 1959 3 Sheets-Sheet 1

Fig. 1.

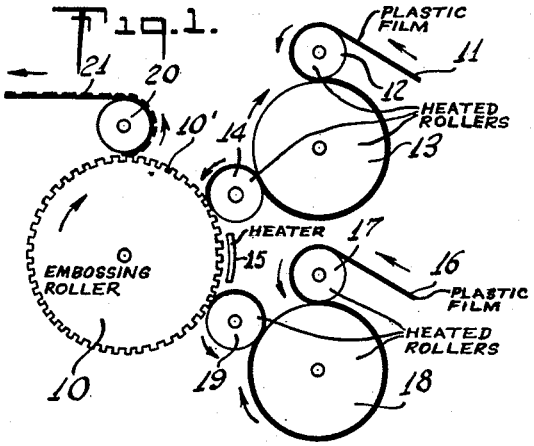

Fig. 3.

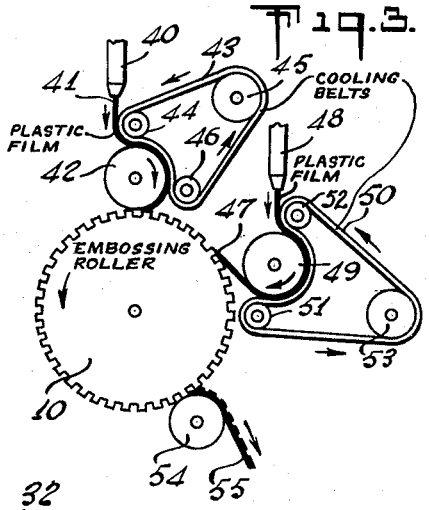

Fig. 2.

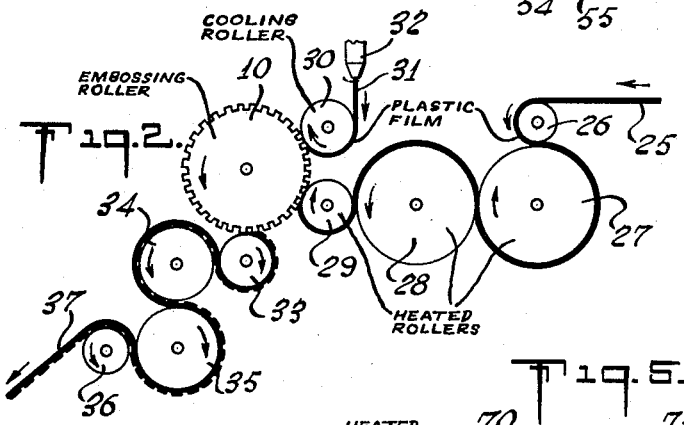

Fig. 4.

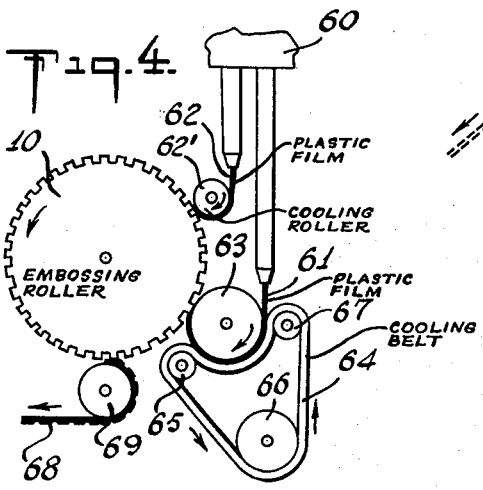

Fig. 5.

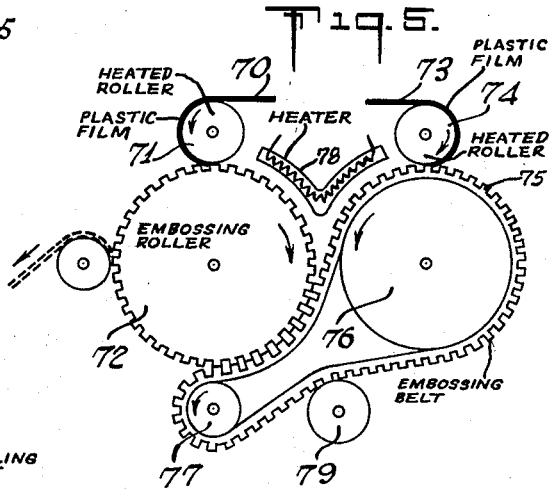

INVENTOR
MARC A. CHAVANNES
BY
ATTORNEY