June 3, 1947. C. L. JOHNSON 2,421,699

AUXILIARY FUEL TANK

Filed May 12, 1944 4 Sheets-Sheet 1

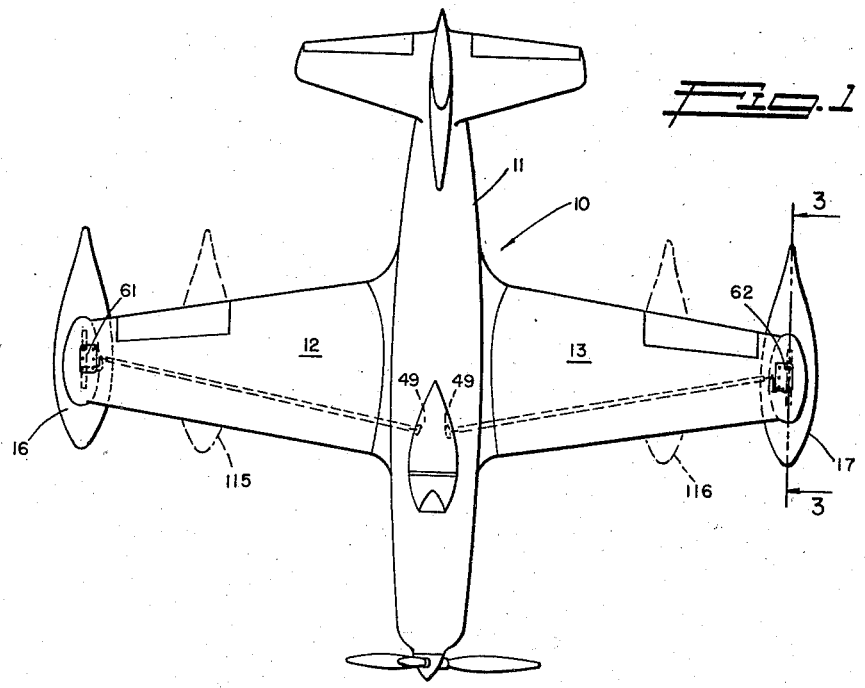

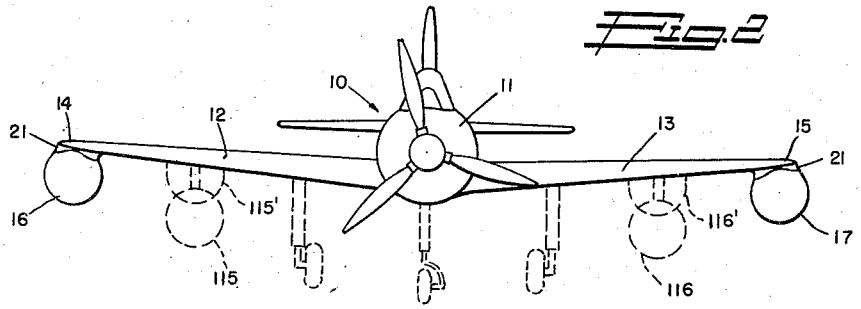

INVENTOR.
CLARENCE L. JOHNSON
BY
George A. Sullivan
AGENT