(No Model.)

H. H. SESSIONS.

RAILROAD CAR.

No. 373,098. Patented Nov. 15, 1887.

Fig. 1.

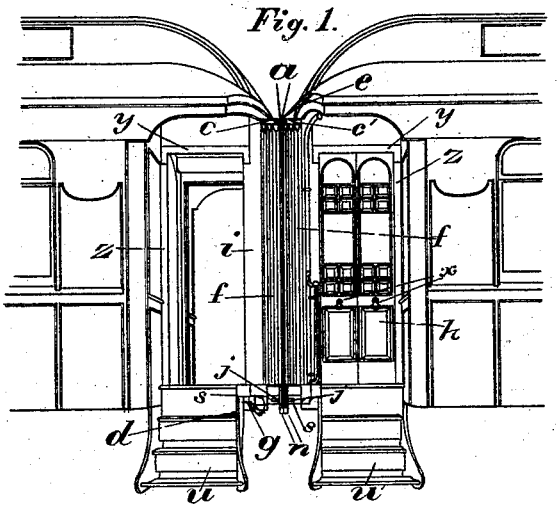

Fig. 2.

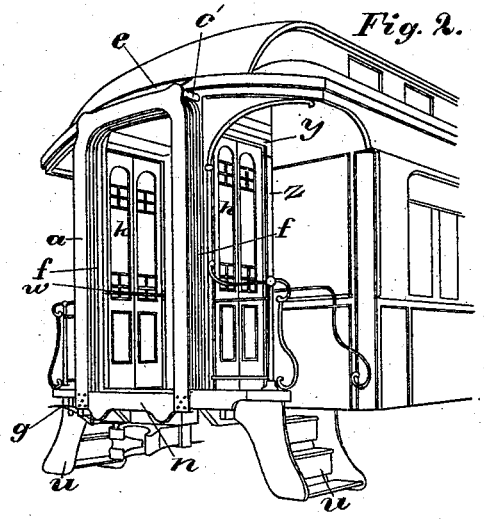

Fig. 3.

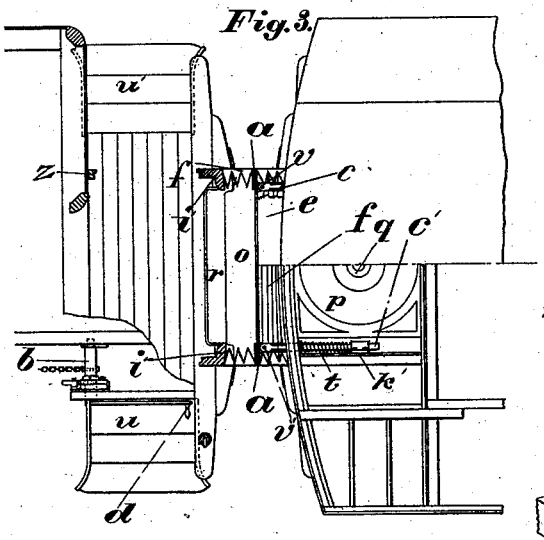

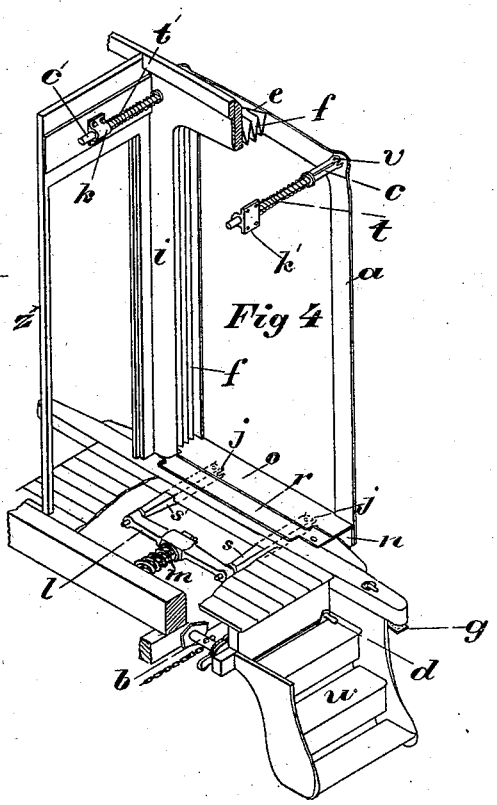

Fig 4

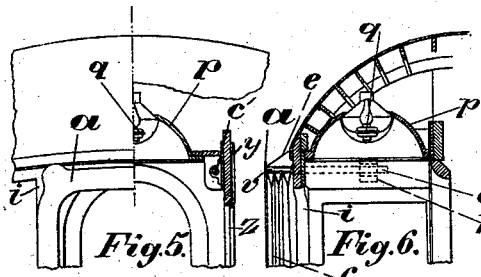

Fig. 5.

Fig. 6.

WITNESSES:

Frederick L. Goodwin

E. L. Huber.

Henry Howard Sessions, INVENTOR

BY Offield & Towle

ATTORNEYS.

N. PETERS, Photo-Lithographer, Washington, D. C.