fig. 7

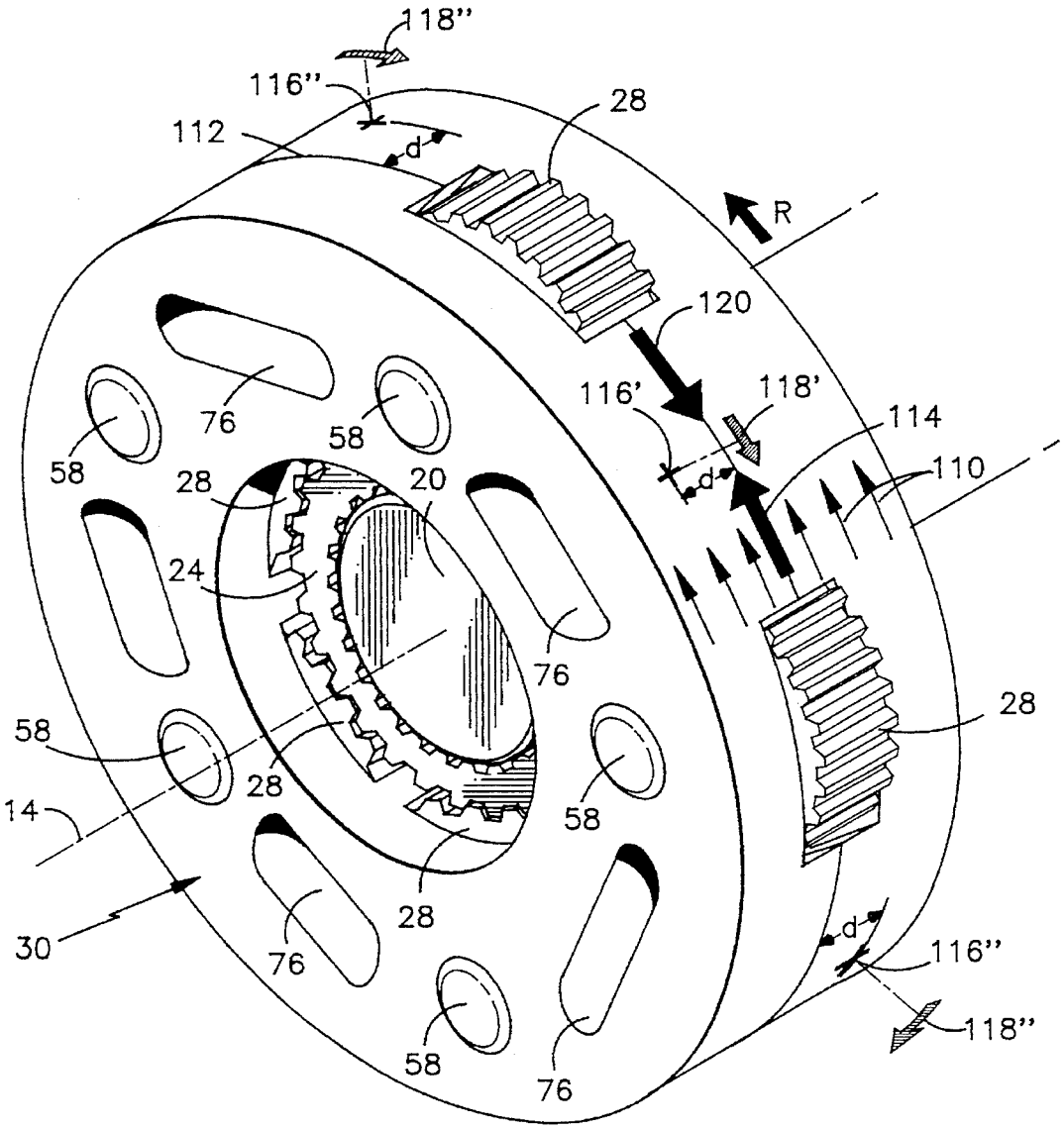
118''
116''
112
d
28
R
120
116'
118'
114
110
76
58
58
28
20
24
76
58
28
14
58
28
30
76
58
76
d
116''
118''