fig.2

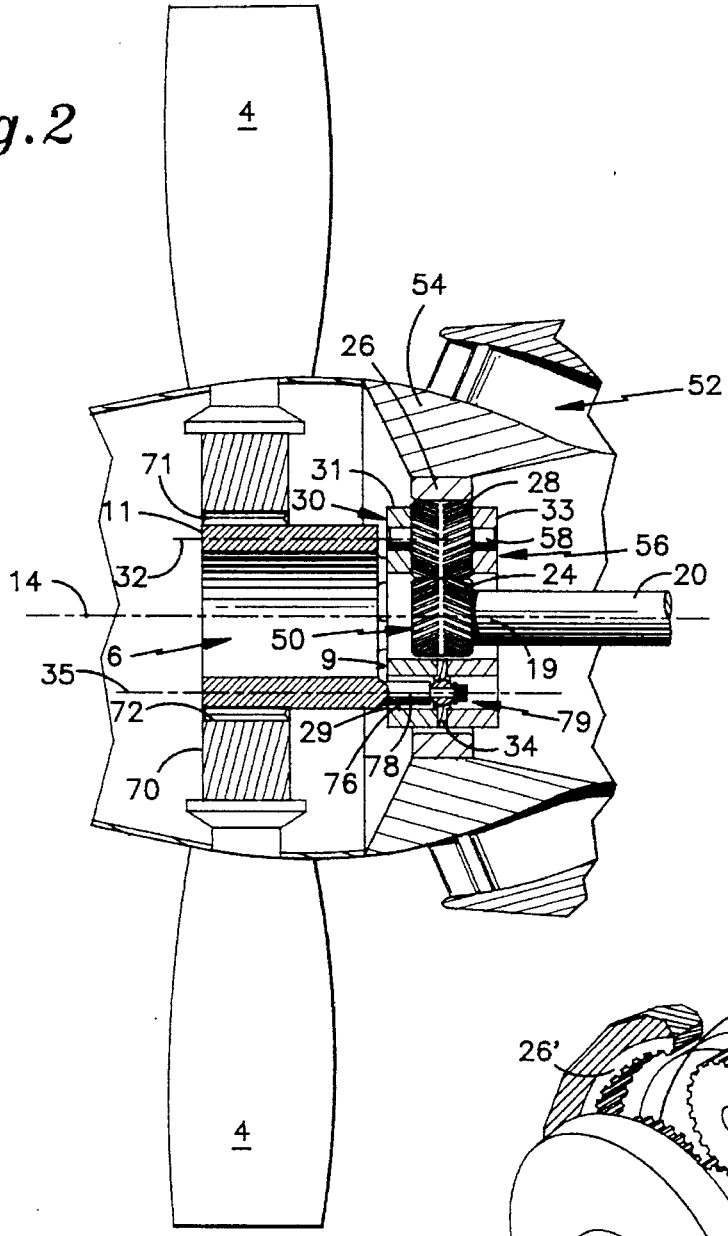

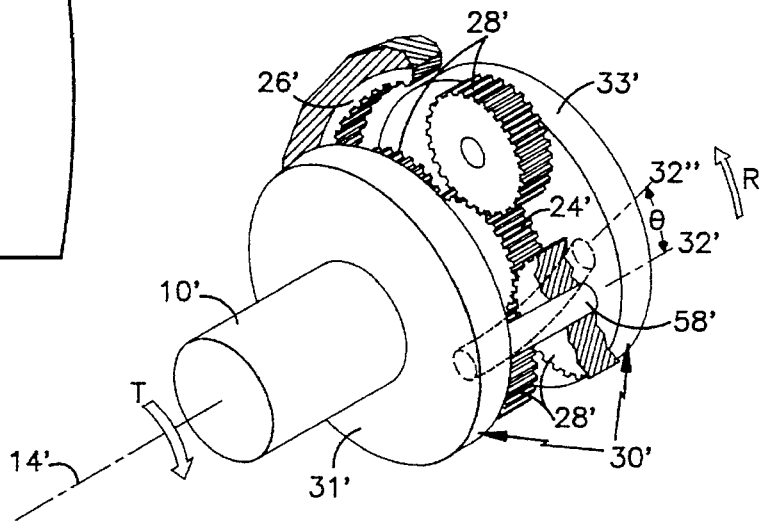

fig.3
prior art