US005466198A

United States Patent [19]

McKibbin et al.

[11] Patent Number: 5,466,198

[45] Date of Patent: Nov. 14, 1995

[54] **GEARED DRIVE SYSTEM FOR A BLADED PROPULSOR**

[75] Inventors: **Albert H. McKibbin**, Cromwell; **Jon D. Burno**, South Windsor, both of Conn.

[73] Assignee: **United Technologies Corporation**, Hartford, Conn.

[21] Appl. No.: **75,827**

[22] Filed: **Jun. 11, 1993**

[51] **Int. Cl.**[6] **F16H 1/28**

[52] **U.S. Cl.** **475/346**

[58] **Field of Search** 475/346

[56] **References Cited**

U.S. PATENT DOCUMENTS

2,547,877	4/1951	Lucia	74/801
2,591,743	4/1952	Thompson	475/346
3,227,006	1/1966	Bowen, Jr.	475/346
3,315,547	4/1967	Fritsch	475/346
3,635,103	1/1972	Monti	475/346
4,158,967	6/1979	Vatterott	475/346
4,430,909	2/1984	Magnuson	475/346

FOREIGN PATENT DOCUMENTS

1500451	2/1965	Germany	F16H 1/48
0289318	4/1991	Germany	475/346
0163848	9/1983	Japan	475/346
691775	5/1953	United Kingdom .	
1367343	9/1974	United Kingdom	F16H 1/48

Primary Examiner—Dirk Wright
Attorney, Agent, or Firm—Kenneth C. Baran

[57] **ABSTRACT**

A geared drive system employing a planetary gear train conveys torque and rotary motion from a source thereof to a bladed propulsor or other device requiring torque and rotary motion. A pivotable joint arrangement connects the planet carrier to a rotating or static torque frame in a manner that isolates the carrier from torsional deflections and the deleterious effects thereof.
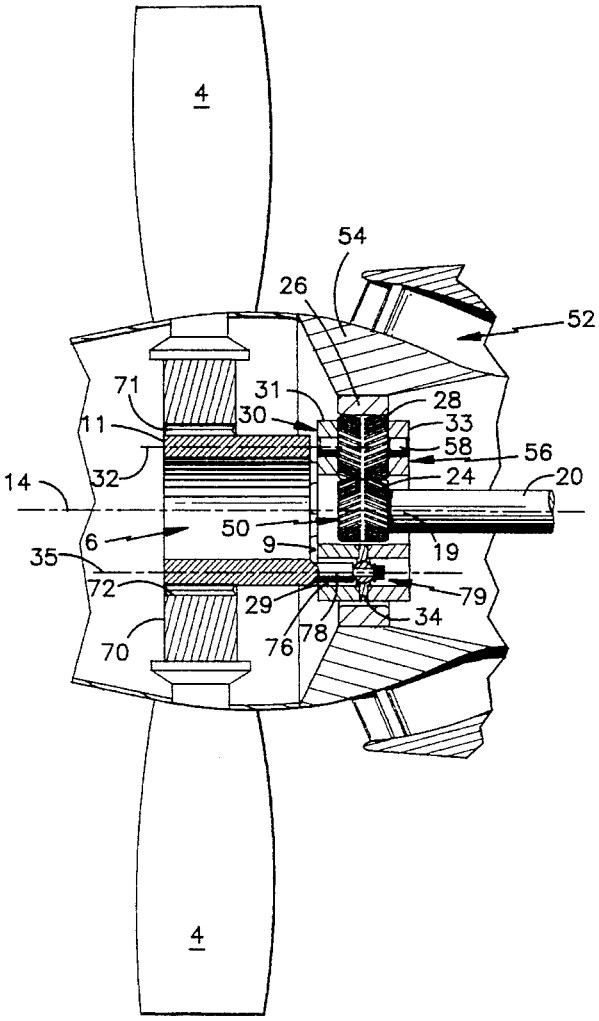
11 Claims, 6 Drawing Sheets