US005150798A

United States Patent [19]

Mills, Jr.

[11] Patent Number: 5,150,798

[45] Date of Patent: Sep. 29, 1992

[54] CRUMB REMOVAL SYSTEM

[75] Inventor: William C. Mills, Jr., Dallas, Tex.

[73] Assignee: Recot, Inc., Plano, Tex.

[21] Appl. No.: 844,870

[22] Filed: Mar. 3, 1992

Related U.S. Application Data

[63] Continuation of Ser. No. 600,880, Oct. 22, 1990, abandoned.

[51] Int. Cl.[5] B07B 13/05

[52] U.S. Cl. 209/660; 209/674

[58] Field of Search 209/660, 674, 659, 661, 209/662, 920, 924, 606, 632, 682, 707, 666, 675

[56] **References Cited**

U.S. PATENT DOCUMENTS

2,312,665	3/1943	Moore	209/674
2,332,506	10/1943	Curtis	209/674 X
2,359,890	10/1944	Birdsall	209/659 X
3,059,770	10/1962	Fichtmuller	209/900
3,356,213	12/1967	Weber	209/643
3,455,445	7/1969	Allen et al.	209/707 X
3,682,301	8/1972	Ross	209/675 X
4,091,931	5/1978	Button et al.	209/580
4,143,769	3/1979	Ripple	209/674 X
4,313,535	2/1982	Carmichael	198/766
4,519,507	5/1985	Gillette et al.	209/682
4,889,241	12/1989	Cogan et al.	209/552

FOREIGN PATENT DOCUMENTS

141916	9/1953	Sweden	209/675
26678	of 1911	United Kingdom	209/682

Primary Examiner—Donald T. Hajec

Attorney, Agent, or Firm—Rothwell, Figg, Ernst & Kurz

[57] **ABSTRACT**

A crumb removal system has an inclined chute extending beneath a horizontal vibratory conveyor trough with an upper convex curved end of the inclined chute spaced in front of the discharge end of the conveyor trough. The spacing between the upper curved end of the chute and the discharge opening of the conveyor trough forms an opening through which fines and small pieces of broken snack food chips can fall and be separated from unbroken chips and larger pieces.
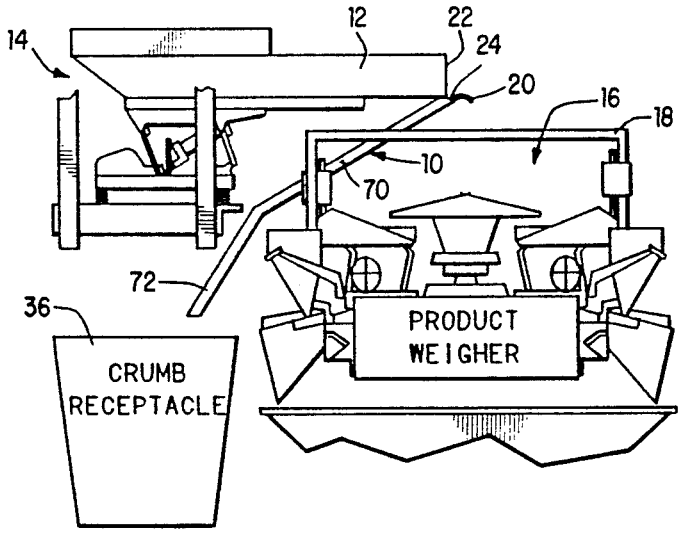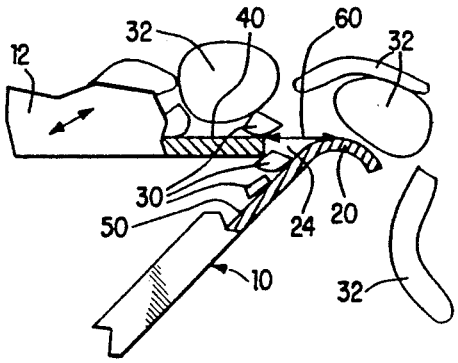
9 Claims, 1 Drawing Sheet