G. Caselli. 2 Sheets, Sheet 2.

Automatic Telegraph.

No. 20,698. Patented June 29, 1858.

Fig. 10.

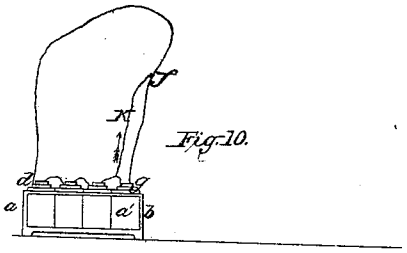

Fig. 8.

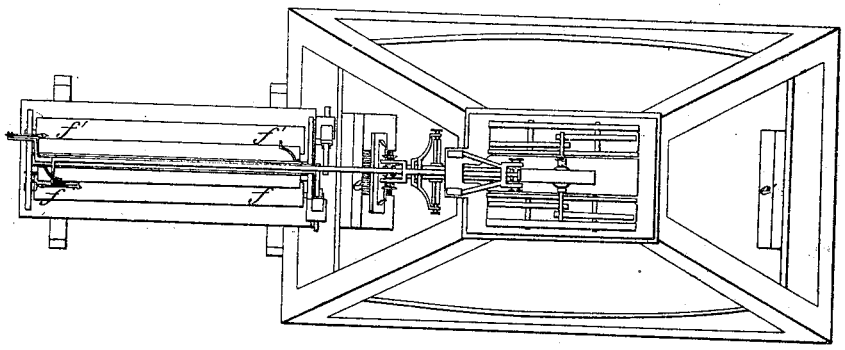

Fig. 3.

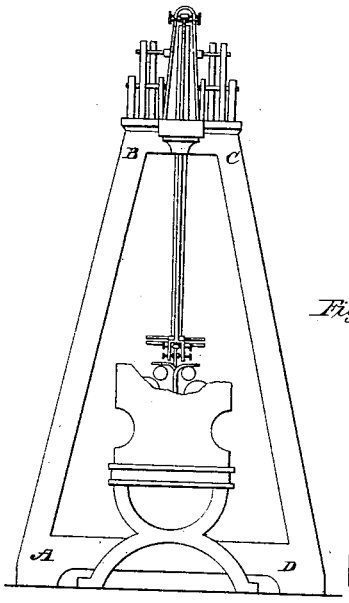

Fig. 5.

Fig. 4.

Fig. 9.

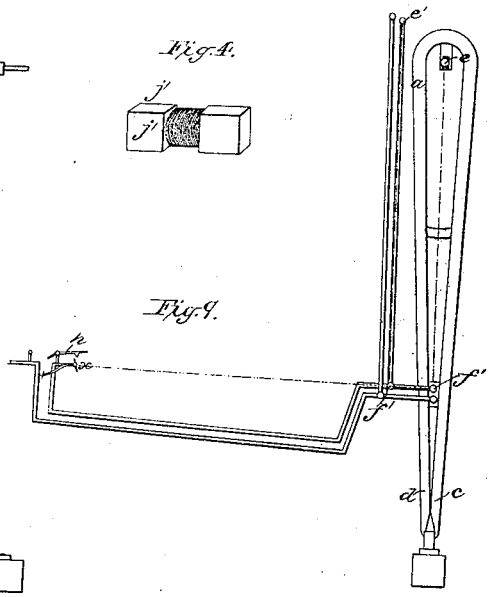

Inventor:

G. Caselli

N. PETERS. Photo-Lithographer, Washington, D. C.