MECHANISM AND METHOD FOR PRODUCING CUSHIONING DUNNAGE

Filed Feb. 7, 1968 4 Sheets-Sheet 2

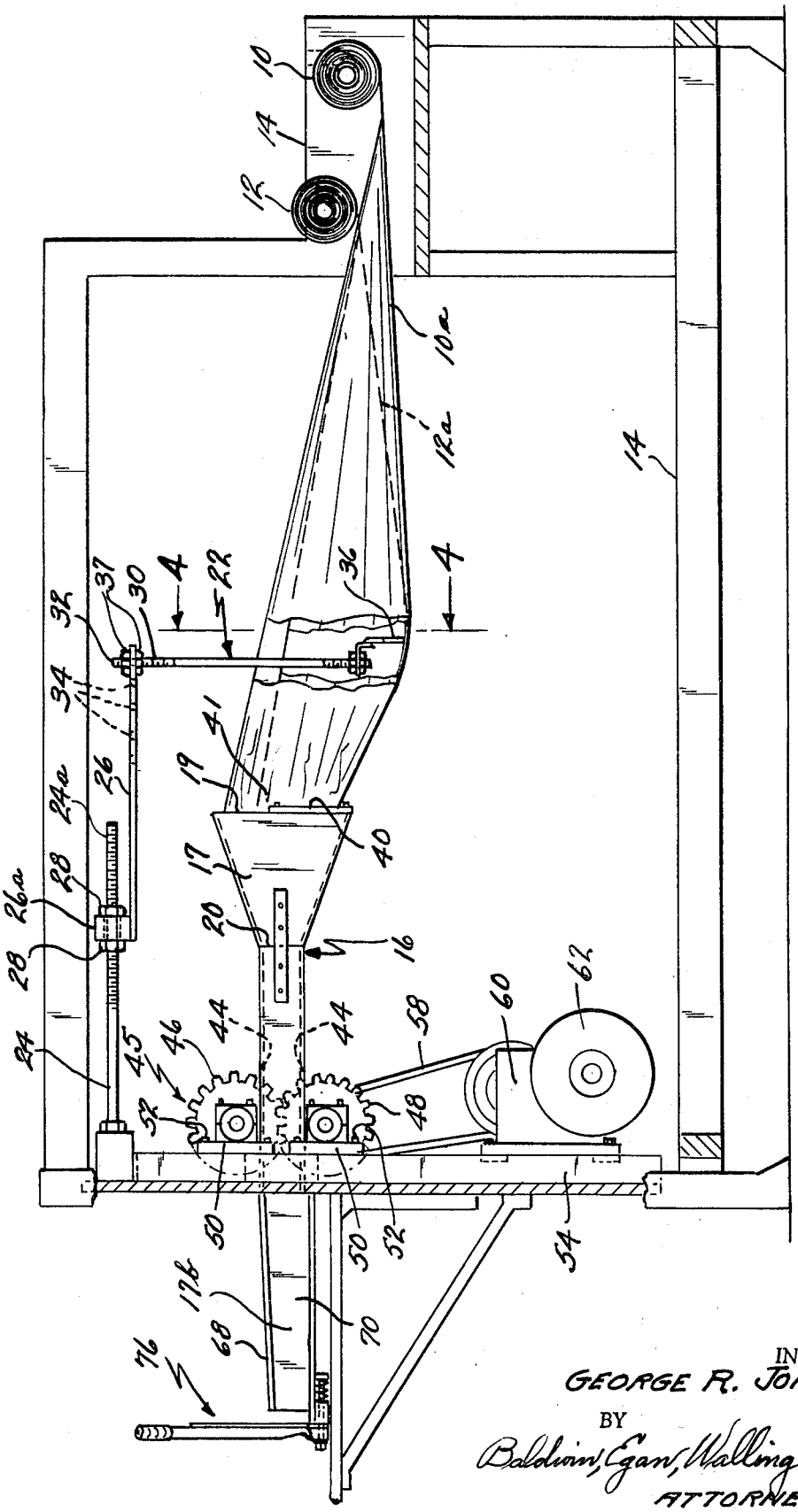

FIG. 2

INVENTOR.
GEORGE R. JOHNSON
BY
Baldwin, Egan, Walling & Fetzer
ATTORNEYS