MECHANISM AND METHOD FOR PRODUCING CUSHIONING DUNNAGE

Filed Feb. 7, 1968 4 Sheets-Sheet 1

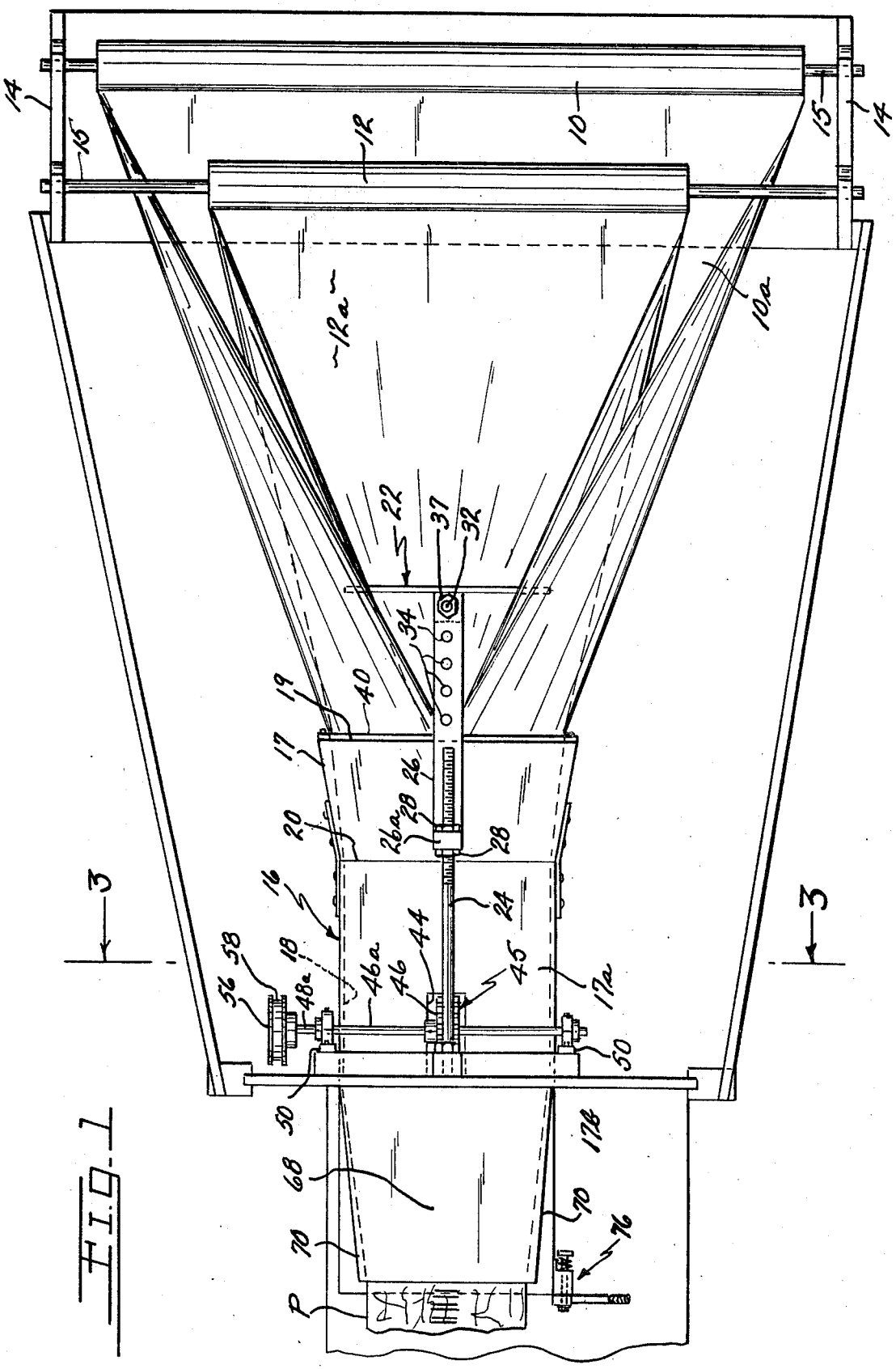

FIG. 1