March 7, 1950 J. J. LUKACS 2,499,597

ENGINE MANIFOLD PRESSURE SIMULATING APPARATUS FOR AIRCRAFT GROUND TRAINERS

Filed July 31, 1946 2 Sheets-Sheet 1

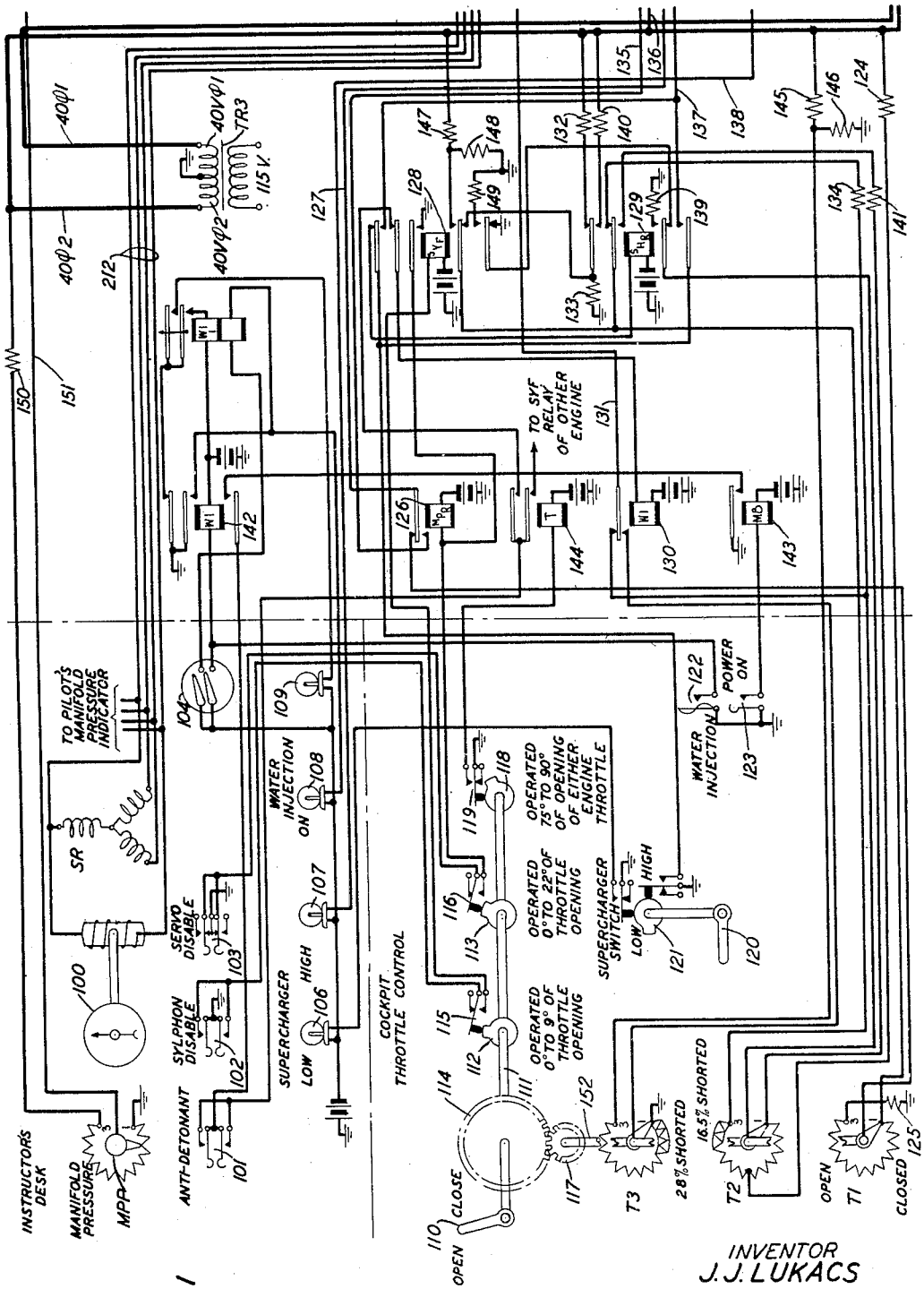

FIG. 1

INVENTOR
J. J. LUKACS
BY P. C. Smith
ATTORNEY