Nov. 3, 1925. 1,559,597

J. A. WILLIAMS

TELEPHONE RECEIVER

Filed May 1, 1922

Fig. 2.

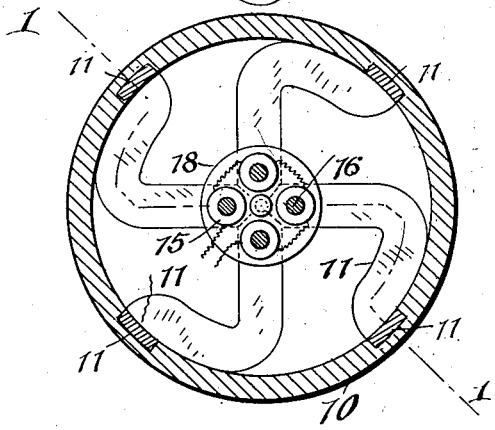

Fig. 1.

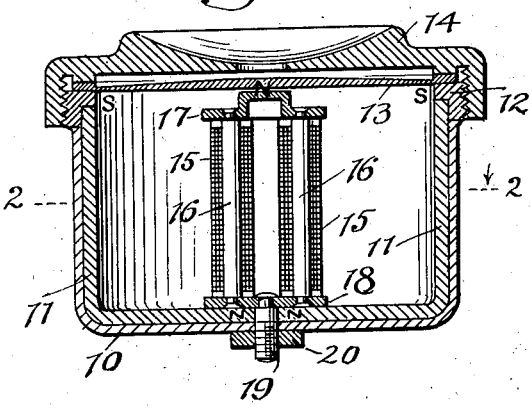

Fig. 6.

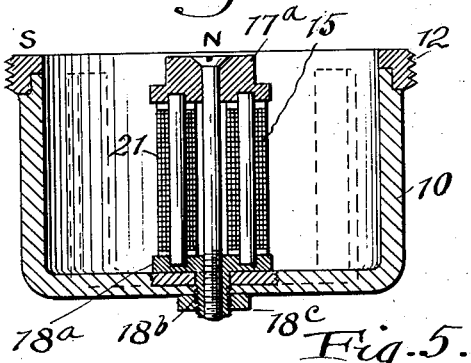

Fig. 3.

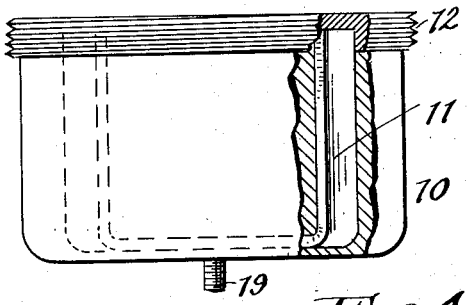

Fig. 5.

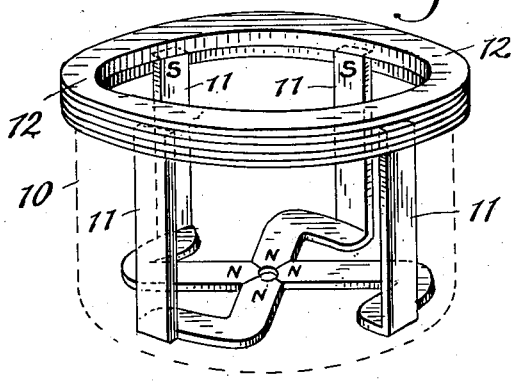

Fig. 4.

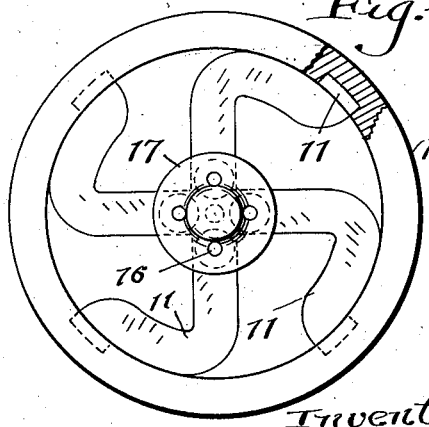

Inventor:
Joseph A. Williams
by
Thurston Kurst & Hudson
attys.