US009457297B2

(12) **United States Patent**
Brown et al.

(10) **Patent No.: US 9,457,297 B2**
(45) **Date of Patent: Oct. 4, 2016**

(54) **METHOD OF SECURING FILTER ELEMENTS**

(71) Applicant: **Lawrence Livermore National Security, LLC**, Livermore, CA (US)

(72) Inventors: **Erik P. Brown**, Tracy, CA (US); **Jeffery L. Haslam**, Livermore, CA (US); **Mark A. Mitchell**, Dublin, CA (US)

(73) Assignee: **Lawrence Livermore National Security, LLC**, Livermore, CA (US)

(*) Notice: Subject to any disclaimer, the term of this patent is extended or adjusted under 35 U.S.C. 154(b) by 290 days.

(21) Appl. No.: **13/693,984**

(22) Filed: **Dec. 4, 2012**

(65) **Prior Publication Data**

US 2014/0151282 A1 Jun. 5, 2014

(51) **Int. Cl.**

B01D 46/24	(2006.01)
B01D 29/52	(2006.01)
B01D 35/30	(2006.01)

(52) **U.S. Cl.**

CPC ***B01D 29/52*** (2013.01); ***B01D 46/2407*** (2013.01); *B01D 35/306* (2013.01); *B01D 46/2414* (2013.01); *B01D 2201/0453* (2013.01)

(58) **Field of Classification Search**

CPC B01D 2201/0438; B01D 29/52; B01D 2201/0453; B01D 35/306; B01D 46/2414; B01D 46/2407; B01D 2201/0483; B01D 27/142; B01D 29/336; B01D 29/356; B01D 46/00; B01D 46/02

See application file for complete search history.

(56) **References Cited**

U.S. PATENT DOCUMENTS

2,904,184	A *	9/1959	Daley	B01D 29/21 210/323.2
3,118,837	A *	1/1964	Briggs	210/323.2
3,442,390	A *	5/1969	Barmore et al.	210/323.2
3,992,177	A *	11/1976	Welteroth	55/288
4,298,474	A *	11/1981	Sillers, Jr.	210/238
4,407,664	A *	10/1983	Sillers, Jr.	B01D 46/0005 55/357
4,574,048	A *	3/1986	van den Broek	B01D 29/114 210/136
4,632,681	A	12/1986	Brunner	
4,997,561	A *	3/1991	Schutz	210/232
5,173,186	A *	12/1992	Spafford et al.	210/455
6,241,885	B1 *	6/2001	Moddemeijer	B01D 29/114 210/232
7,959,803	B2	6/2011	Antoun	
8,197,685	B2	6/2012	Ribet et al.	
2012/0111786	A1 *	5/2012	Chiang	B01D 29/111 210/238

FOREIGN PATENT DOCUMENTS

TW 201138925 A * 11/2011

* cited by examiner

Primary Examiner — Thomas M Lithgow
(74) *Attorney, Agent, or Firm* — Eddie E. Scott

(57) **ABSTRACT**

A filter securing system including a filter unit body housing; at least one tubular filter element positioned in the filter unit body housing, the tubular filter element having a closed top and an open bottom; a dimple in either the filter unit body housing or the top of the tubular filter element; and a socket in either the filter unit body housing or the top of the tubular filter element that receives the dimple in either the filter unit body housing or the top of the tubular filter element to secure the tubular filter element to the filter unit body housing.
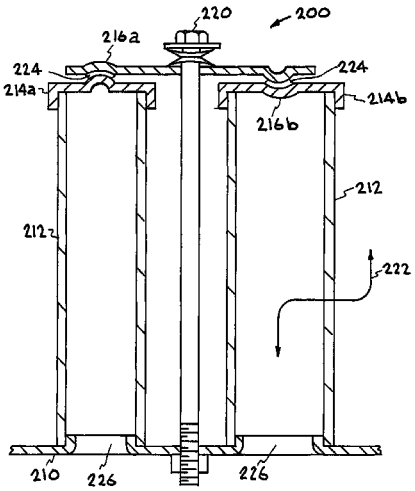
3 Claims, 7 Drawing Sheets