J. D. PEDERSEN.

CARTRIDGE STOP FOR MAGAZINE FIREARMS.

APPLICATION FILED MAR. 15, 1909.

**953,797.**

Patented Apr. 5, 1910.

2 SHEETS—SHEET 1.

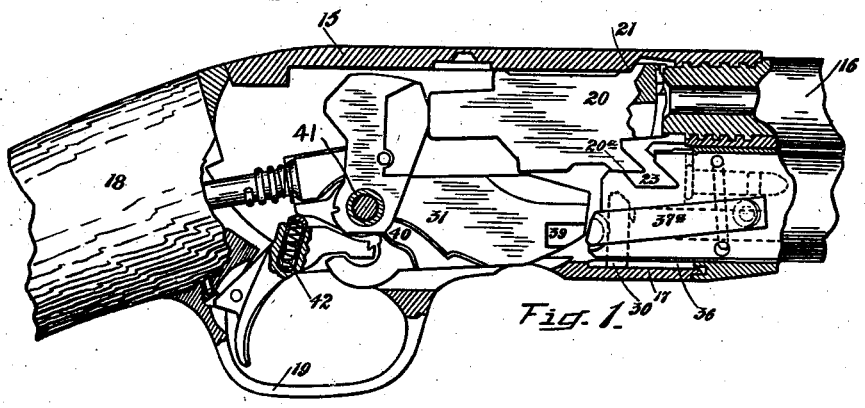


Fig. 1.

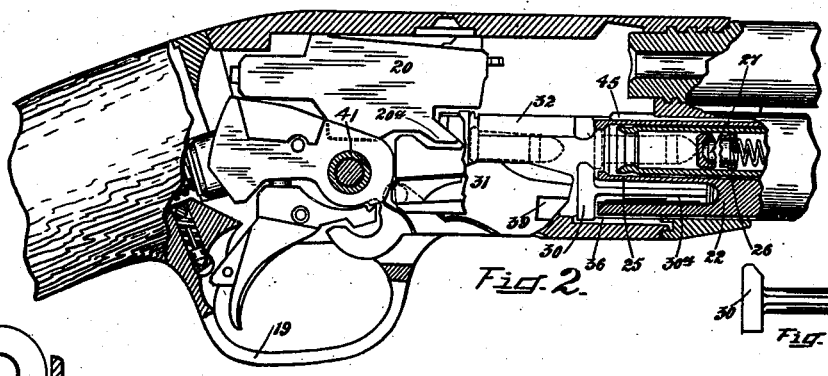


Fig. 2.

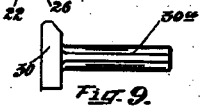


Fig. 9.

Fig. 10.

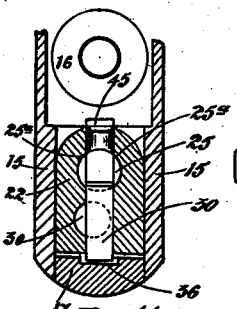


Fig. 11.

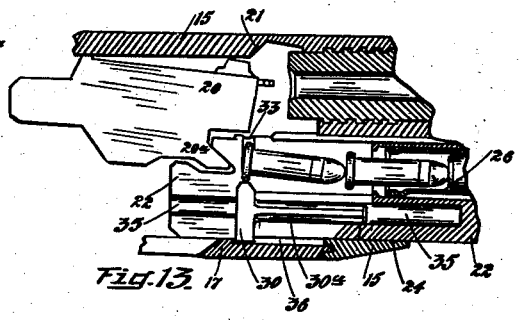


Fig. 13.

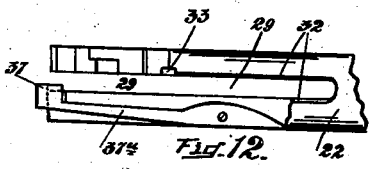


Fig. 12.

Witnesses

Chas. A. Yardell

Sarah E. Clark.

Inventor

JOHN D. PEDERSEN

By Robinson, Martin & Jones

Attorneys