May 25, 1948. E. A. LINK, JR 2,442,297

TRAINING DEVICE
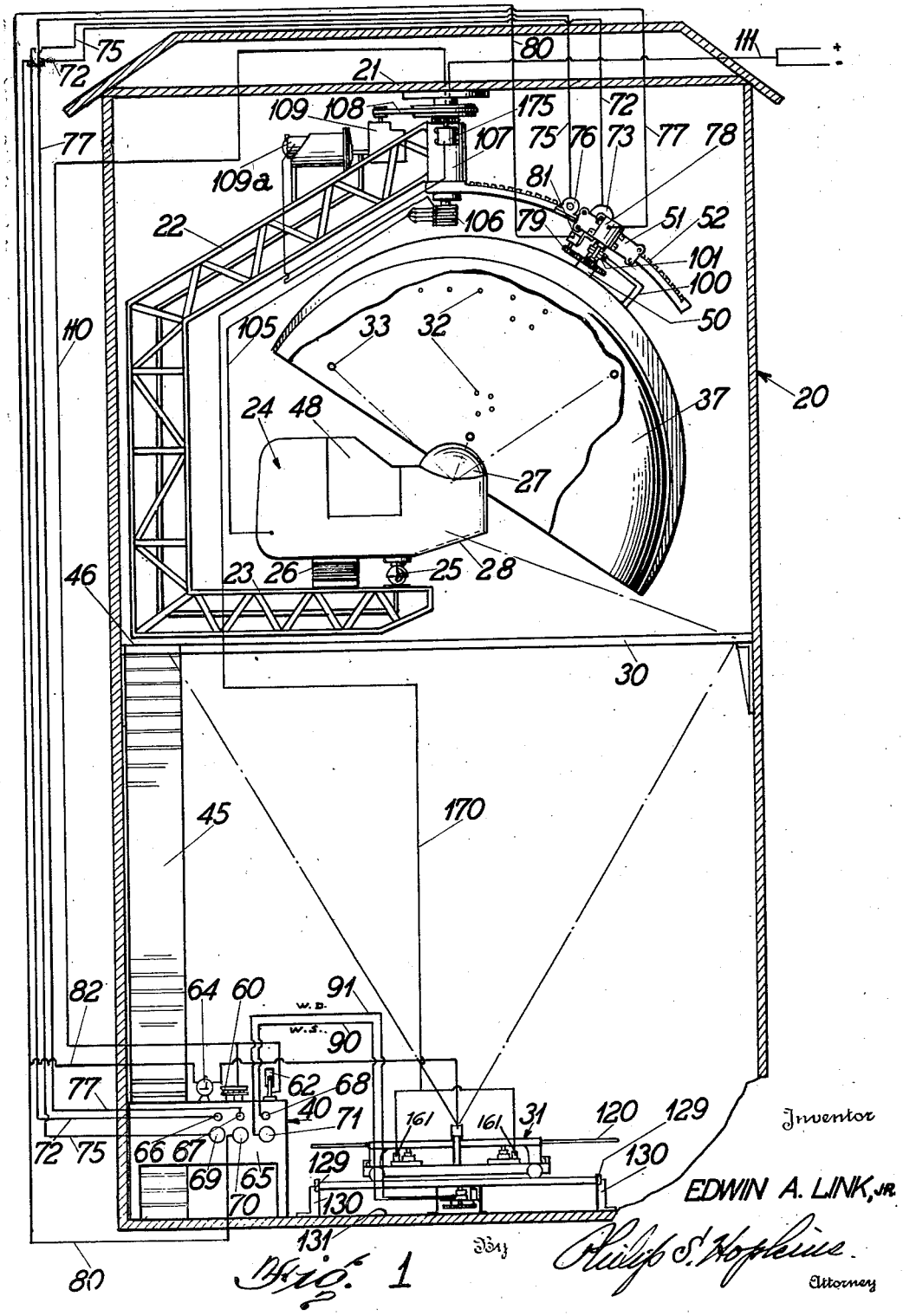
Filed Jan. 14, 1939 4 Sheets-Sheet 1