Dec. 19, 1950 T. H. BARTH 2,534,397

SYNCHRONIZING BOMB SIGHT

Filed April 5, 1935 12 Sheets-Sheet 1

Fig. 1

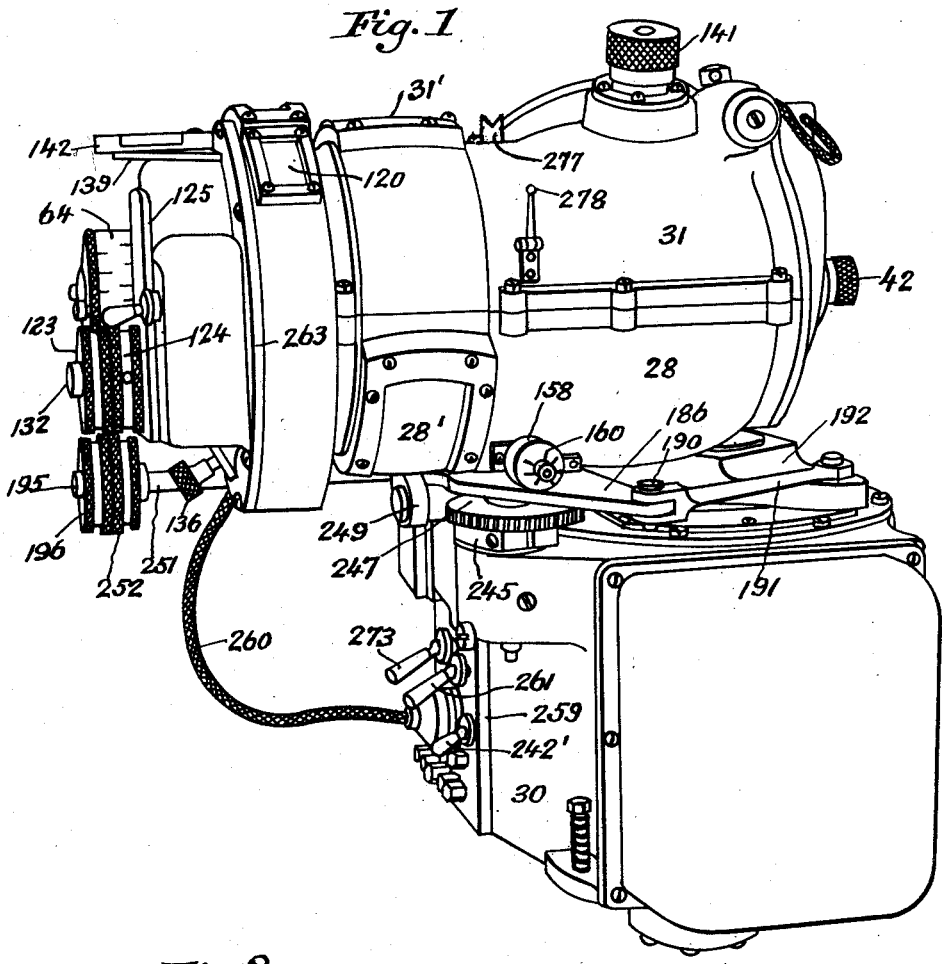

Fig. 2

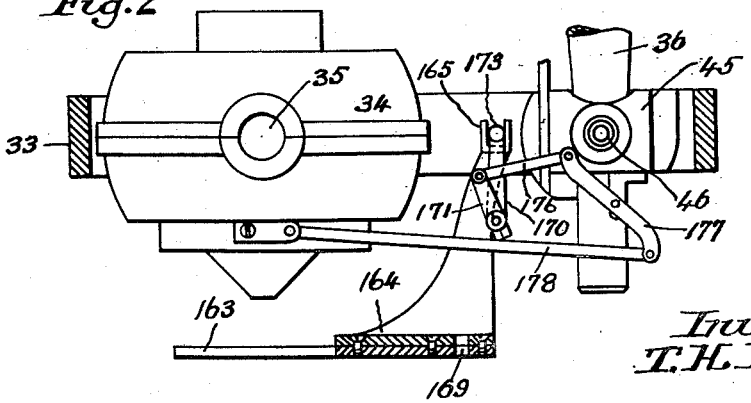

Inventor:
T. H. Barth

by Harold Dodd
Attorney