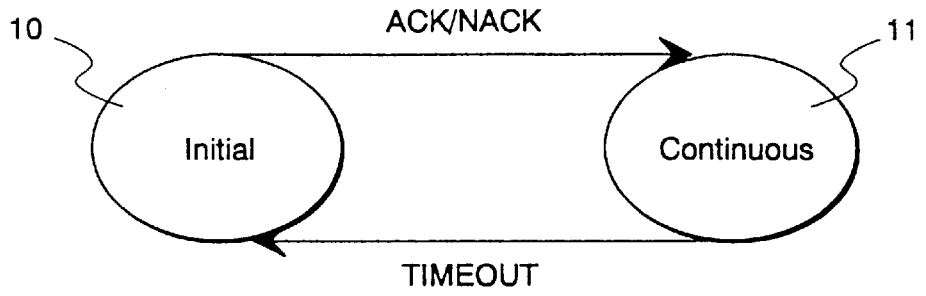
10
ACK/NACK
11
Initial
Continuous
TIMEOUT

Fig. 1

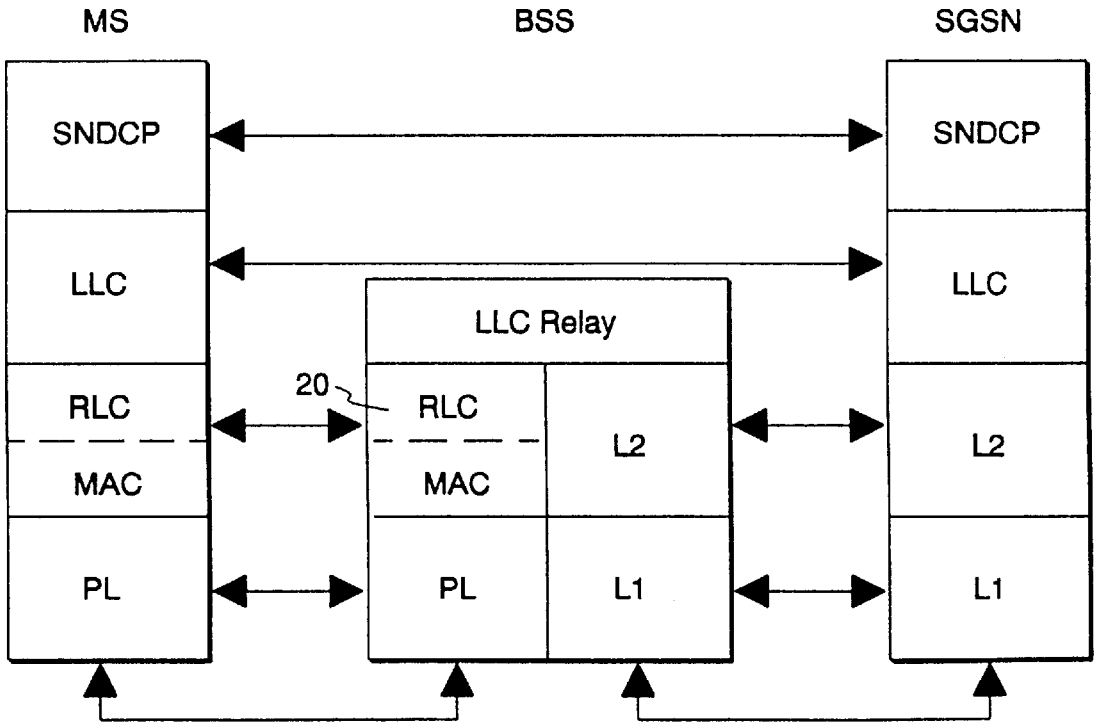
MS
BSS
SGSN
SNDCP
SNDCP
LLC
LLC
LLC Relay
20
RLC
RLC
L2
L2
MAC
MAC
PL
PL
L1
L1

Fig. 2