Nov. 3, 1925. 1,559,596

J. A. WILLIAMS

TELEPHONE RECEIVER

Filed April 21, 1922

Fig. 1.

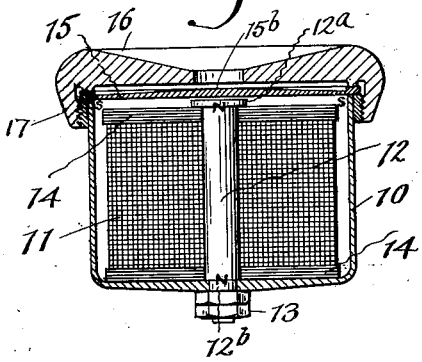

Fig. 2.

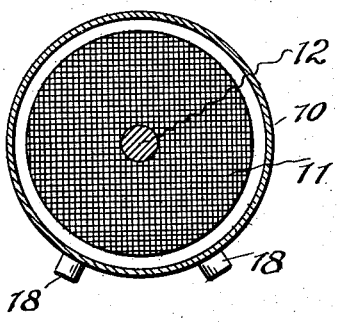

Fig. 3.

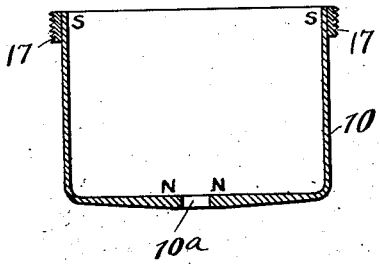

Fig. 4.

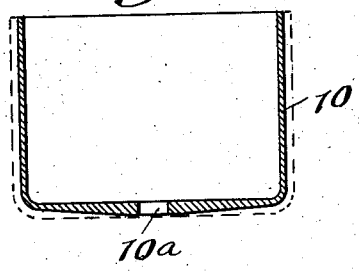

Fig. 5.

Fig. 6.

Fig. 7.

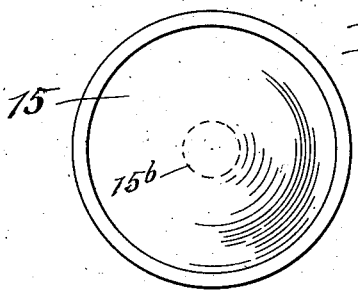

Inventor:
Joseph A. Williams
by
Thurston Kent & Hudson
attorneys.