(No Model.)

J. G. PENNYCUICK.

TILE FOR ILLUMINATING PURPOSES.

No. 247,996. Patented Oct. 4, 1881.

Fig. 1.

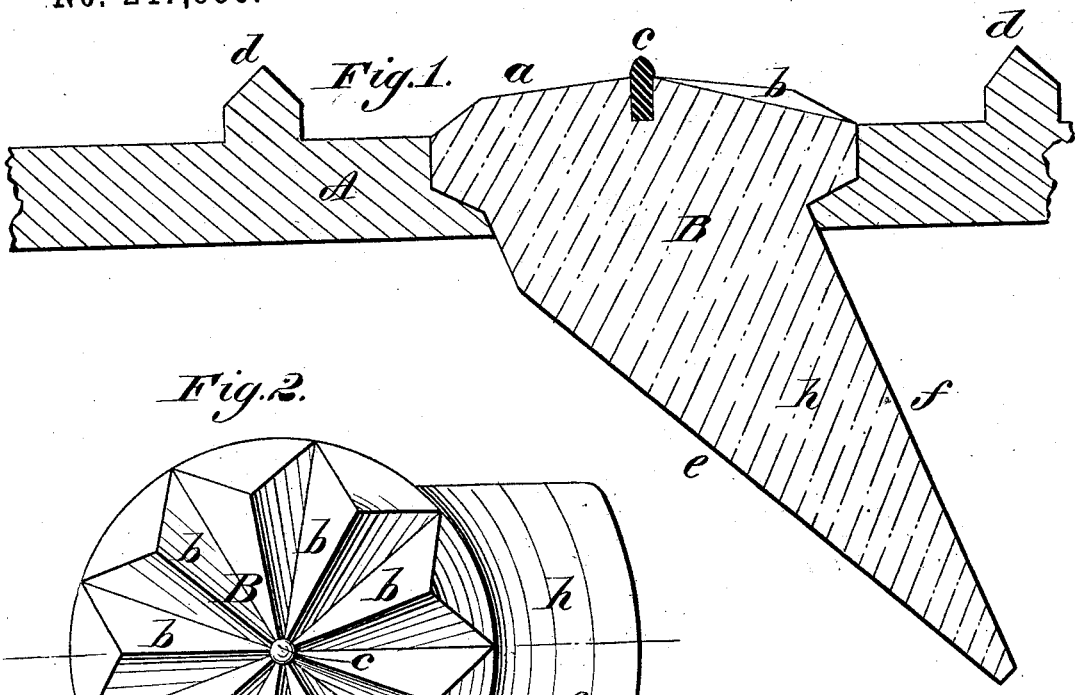

Fig. 2.

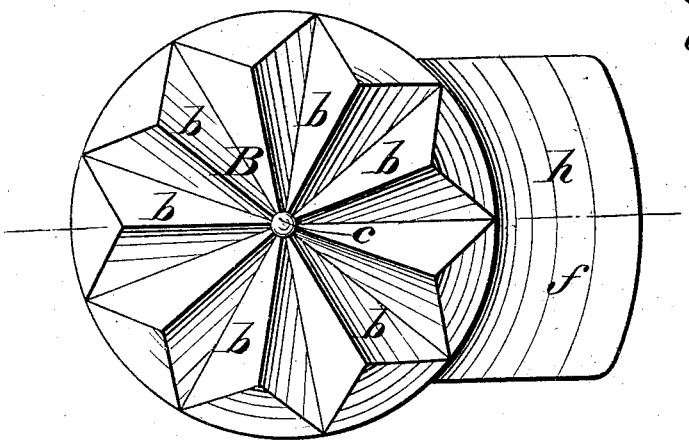

Fig. 3.

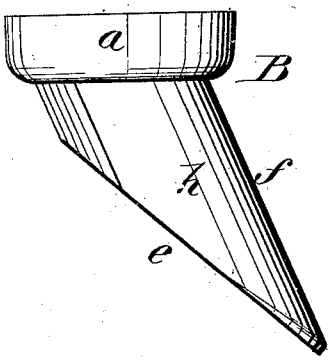

Fig. 4.

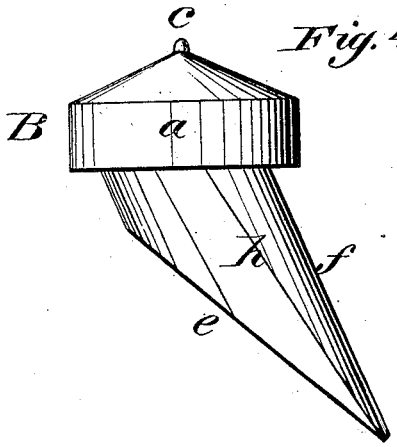

WITNESSES:

Donn Twitchell.

C. Sedgwick

INVENTOR:

J. G. Pennycuick

BY Munn & Co.

ATTORNEYS.

N. PETERS. Photo-Lithographer, Washington, D. C.