US008839996B2

(12) **United States Patent**
Parazynski et al.

(10) **Patent No.: US 8,839,996 B2**
(45) **Date of Patent: Sep. 23, 2014**

(54) **APPARATUS AND METHODS FOR FLUID STORAGE AND DELIVERY**

(75) Inventors: **Scott E. Parazynski**, Houston, TX (US); **Grant C. Bue**, Houston, TX (US); **Mark E. Schaefbauer**, League City, TX (US); **Kase C. Urban**, League City, TX (US)

(73) Assignee: **The United States of America as represented by the Administrator of the National Aeronautics and Space Administration**, Washington, DC (US)

(*) Notice: Subject to any disclaimer, the term of this patent is extended or adjusted under 35 U.S.C. 154(b) by 1236 days.

(21) Appl. No.: **12/612,171**

(22) Filed: **Nov. 4, 2009**

(65) **Prior Publication Data**

US 2011/0101050 A1 May 5, 2011

(51) **Int. Cl.**

A45F 3/16	(2006.01)
A45F 5/00	(2006.01)
A45F 3/04	(2006.01)

(52) **U.S. Cl.**

CPC ***A45F 3/16*** (2013.01); ***A45F 3/04*** (2013.01)
USPC **224/148.2**; 224/148.3; 224/148.4

(58) **Field of Classification Search**

USPC 224/148.2, 148.4, 148.3
See application file for complete search history.

(56) **References Cited**

U.S. PATENT DOCUMENTS

4,090,650	A *	5/1978	Gotta	224/148.2
4,196,817	A *	4/1980	Moser	215/12.1
4,420,097	A *	12/1983	Motsenbocker	222/131
4,544,087	A	10/1985	Modig	
4,948,023	A *	8/1990	Tripp	224/148.2
4,998,415	A *	3/1991	Larsen	62/231
5,060,833	A *	10/1991	Edison et al.	224/148.2
5,085,349	A *	2/1992	Fawcett	220/703
5,115,947	A *	5/1992	McDonnell et al.	222/107
5,221,016	A *	6/1993	Karpal	215/12.2
5,864,880	A *	2/1999	Adam	2/94
5,940,880	A *	8/1999	Phillips	2/7
6,220,490	B1 *	4/2001	O'Hara	224/148.2
6,422,300	B1	7/2002	Wylin	
6,497,348	B2 *	12/2002	Forsman et al.	224/148.2
6,651,694	B1	11/2003	Krenzel et al.	
6,820,780	B2	11/2004	Forsman et al.	
6,870,135	B2 *	3/2005	Hamm et al.	219/386
6,997,181	B2	2/2006	Fletcher	
7,063,243	B2	6/2006	Forsman et al.	
7,311,231	B2	12/2007	Noell et al.	
7,392,916	B1 *	7/2008	Kuighadush	220/707
7,464,837	B2 *	12/2008	Hoskins	222/175

(Continued)

Primary Examiner — Adam Waggenspack
Assistant Examiner — Lester L Vanterpool
(74) *Attorney, Agent, or Firm* — Kurt G. Hammerle

(57) **ABSTRACT**

An apparatus and method for storing and delivering fluid to a person comprises, in at least one specific embodiment, a fluid reservoir having an internal volume therein with an opening disposed through a first wall or a second wall of the fluid reservoir and located toward a first end of the fluid reservoir. A first portion of a tube can be exterior to the fluid reservoir and a second portion of the tube can be disposed through the opening and within the internal volume. At least one insulation layer can be disposed about the exterior of the first wall of the fluid reservoir. The second wall of the fluid reservoir can be configured for transferring heat from or to the internal volume or from the person. At least one baffle is disposed within the internal volume and connected to the first wall and the second wall of the fluid reservoir.
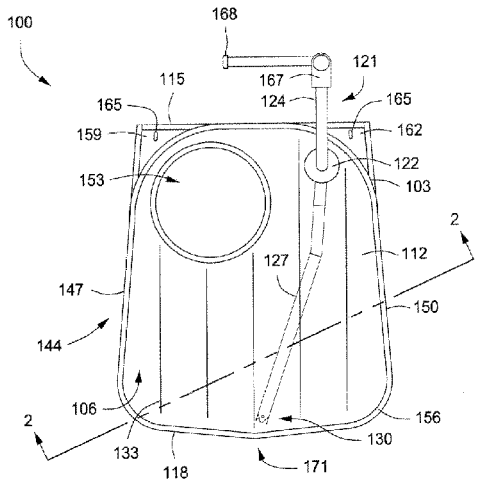
32 Claims, 5 Drawing Sheets