Aug. 16, 1955 F. PETTIT 2,715,296

TOY STETHOSCOPE

Filed Jan. 21, 1952

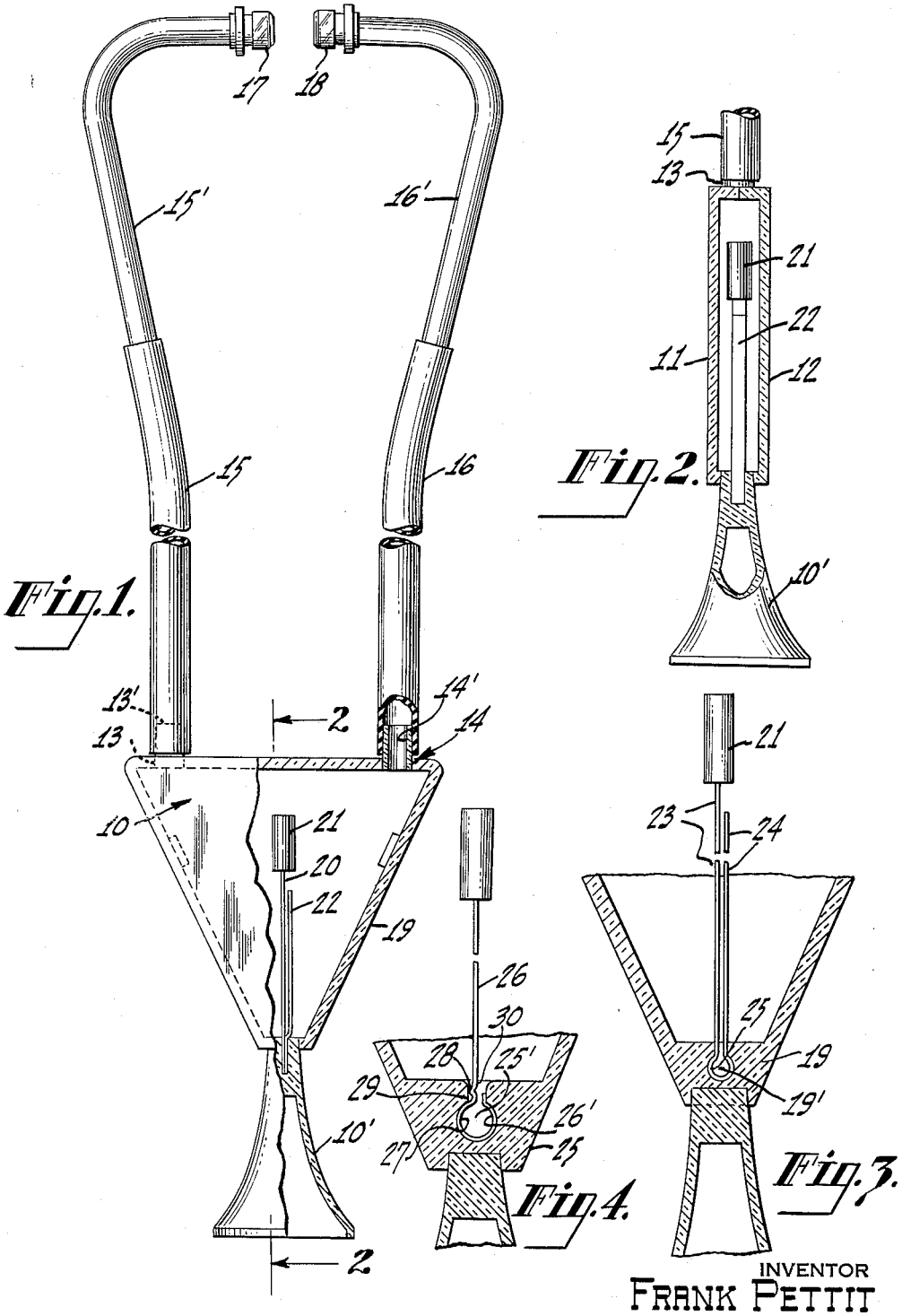

Fig. 1.

Fig. 2.

Fig. 3.

Fig. 4.

INVENTOR
FRANK PETTIT
BY
William A. Zaleuk
ATTORNEY