US008689695B2

(12) **United States Patent**
Burdine et al.

(10) **Patent No.: US 8,689,695 B2**
(45) **Date of Patent: Apr. 8, 2014**

(54) **AREA DENIAL DEVICE**

(76) Inventors: **Robert Van Burdine**, Ardmore, TN (US); **Dorothy Devine Burdine**, Ardmore, TN (US)

(*) Notice: Subject to any disclaimer, the term of this patent is extended or adjusted under 35 U.S.C. 154(b) by 163 days.

(21) Appl. No.: **13/372,192**

(22) Filed: **Feb. 13, 2012**

(65) **Prior Publication Data**

US 2013/0206028 A1 Aug. 15, 2013

(51) **Int. Cl.**
F42B 22/02 (2006.01)

(52) **U.S. Cl.**
USPC **102/424**; 102/401; 102/428

(58) **Field of Classification Search**
USPC 102/401–429; 588/403
See application file for complete search history.

(56) **References Cited**

U.S. PATENT DOCUMENTS

1,670,078	A *	5/1928	Pratt	102/414
2,805,067	A *	9/1957	Ryan	473/570
3,964,392	A *	6/1976	Kintish et al.	102/404
5,904,443	A *	5/1999	Soleau	404/6
2003/0133758	A1 *	7/2003	Dever	405/259.6
2012/0186479	A1 *	7/2012	Skidmore et al.	102/364
2013/0068122	A1 *	3/2013	Mitchell	102/401
2013/0206028	A1 *	8/2013	Burdine et al.	102/424

* cited by examiner

Primary Examiner — Samir Abdosh

(57) **ABSTRACT**

A propelled lance provides a wounding non-lethal anti-insurgent action when stepped on by piercing an enemy insurgent's foot with a lance penetrator. The lance penetrator lodges in the foot and further penetration is impeded by a stop plate. The lance penetrator may insert an RFID or other identifiable device or other payload into the insurgent. The lance penetrator provides anti-personnel, anti-vehicle and anti-robot action.
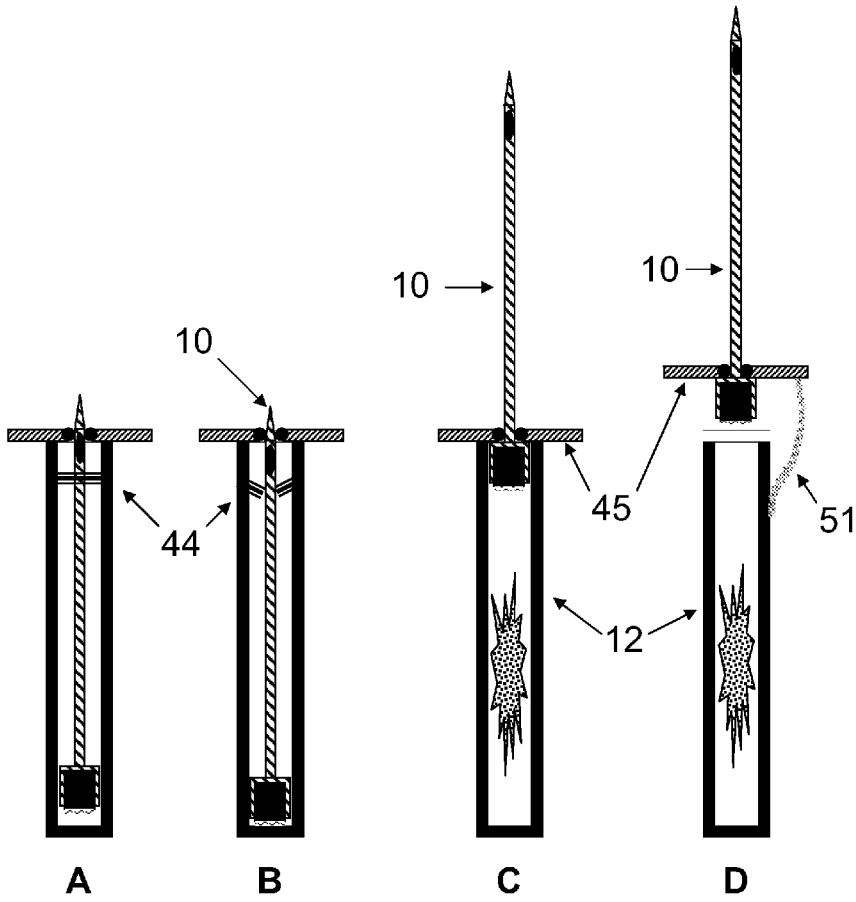
15 Claims, 26 Drawing Sheets