DEVICE FOR SLICING CRYSTALLINE MATERIAL

Original Filed Jan. 2, 1963 3 Sheets-Sheet 1

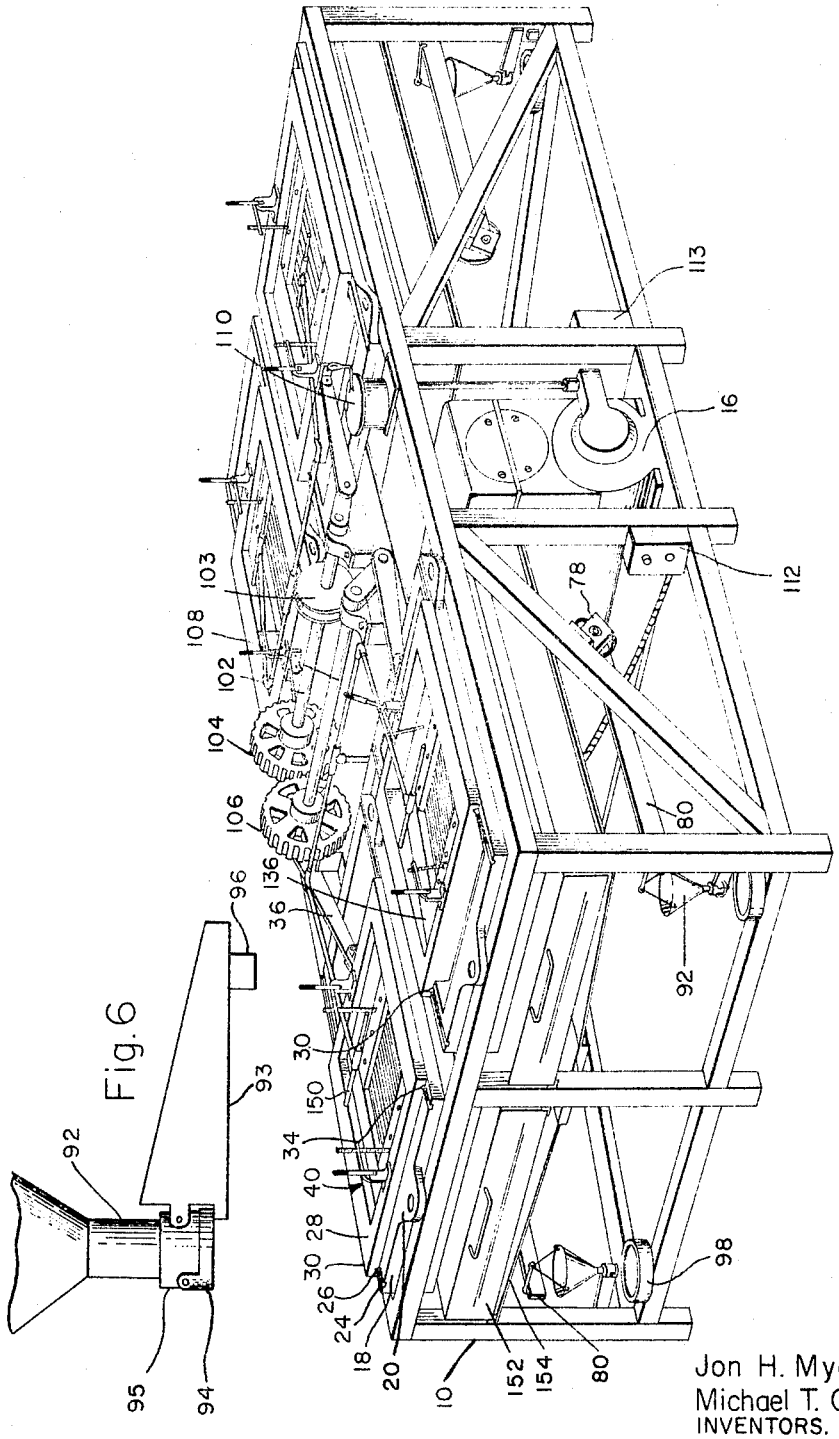


Fig. 1.

Fig. 6

Jon H. Myer,
Michael T. Gromek
INVENTORS.
BY.
Walter R. Thiel
ATTORNEY.