US00D760395S

(12) **United States Design Patent**
Barbaric et al.

(10) **Patent No.: US D760,395 S**
(45) **Date of Patent: ** Jun. 28, 2016**

(54) **WEARABLE BIOSENSING DEVICE**

(71) Applicants: **Mladen Barbaric**, Ottawa (CA); **Minkyu Choi**, Montreal (CA); **Kihyun Kim**, Ottawa (JP); **Sungmoon Kim**, Ville St-Laurent (CA)

(72) Inventors: **Mladen Barbaric**, Ottawa (CA); **Minkyu Choi**, Montreal (CA); **Kihyun Kim**, Ottawa (JP); **Sungmoon Kim**, Ville St-Laurent (CA)

(73) Assignee: **EMPATICA SRL**, Milan (IT)

(**) Term: **14 Years**

(21) Appl. No.: **29/509,637**

(22) Filed: **Nov. 19, 2014**

(51) **LOC (10) Cl.** **24-01**

(52) **U.S. Cl.**
USPC **D24/186**

(58) **Field of Classification Search**
USPC D24/165–168, 186, 187, 107, 200; D10/70, 75, 97, 98, 30–32, 38; 600/301, 382–384, 386, 390, 483, 600/500–503, 508, 509, 513; 128/DIG. 15; D11/3, 4; D14/341, 344
CPC A61B 5/6803; A61B 5/681; A61B 5/6824; A61B 5/6825; A61B 5/024; A61B 5/02405; A61B 5/02438
See application file for complete search history.

(56) **References Cited**

U.S. PATENT DOCUMENTS

4,305,401	A	*	12/1981	Reissmueller	A61B 5/02241 600/503
D402,762	S	*	12/1998	Szpur	D24/200
D567,950	S	*	4/2008	Savage, Jr.	D24/186
D605,305	S	*	12/2009	Carter	D24/231
D645,360	S	*	9/2011	Kiser	D10/32
D670,583	S	*	11/2012	Shaanan	D10/70
D674,488	S	*	1/2013	McKay	D24/167
D716,457	S	*	10/2014	Brefka	D24/186
D736,935	S	*	8/2015	Just	D24/187
D737,157	S	*	8/2015	Akana	D10/32
2010/0036270	A1	*	2/2010	Chen	A61B 5/0006 600/509
2014/0135612	A1	*	5/2014	Yuen	A61B 5/02405 600/407

* cited by examiner

Primary Examiner — Anhdao Doan

(57) **CLAIM**

The ornamental design for a wearable biosensing device, as shown and described.

DESCRIPTION

FIG. **1** is a perspective view of a wearable biosensing device;
FIG. **2** is another perspective view thereof;
FIG. **3** is a front view thereof;
FIG. **4** is a back view thereof;
FIG. **5** is a top view thereof;
FIG. **6** is a bottom view thereof;
FIG. **7** is a left side view thereof; and,
FIG. **8** is a right side view thereof.
The broken lines immediately adjacent the shaded areas represent the bounds of the claimed design while all other broken lines are directed to environment and are for illustrative purposes only; the broken lines form no part of the claimed design.
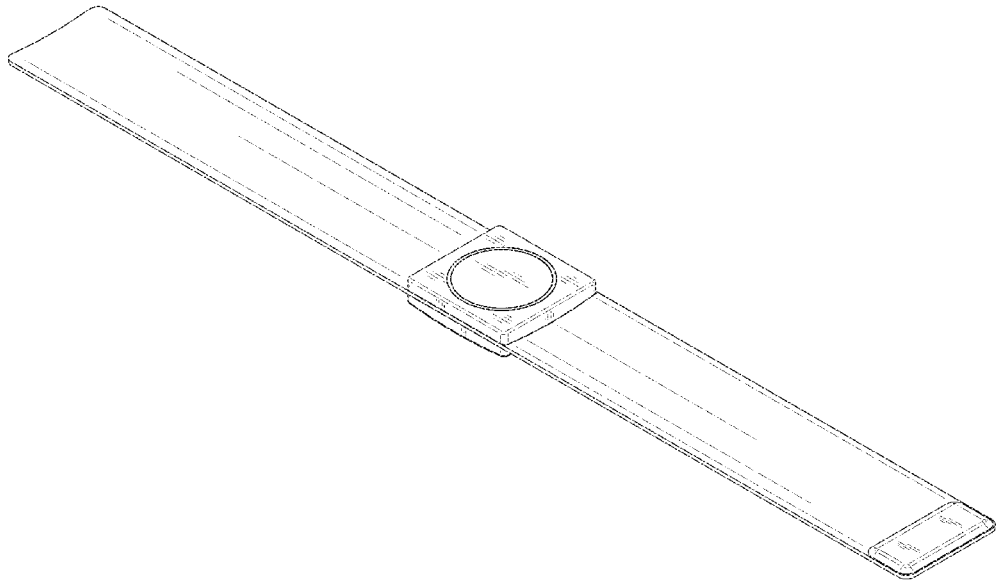
1 Claim, 5 Drawing Sheets