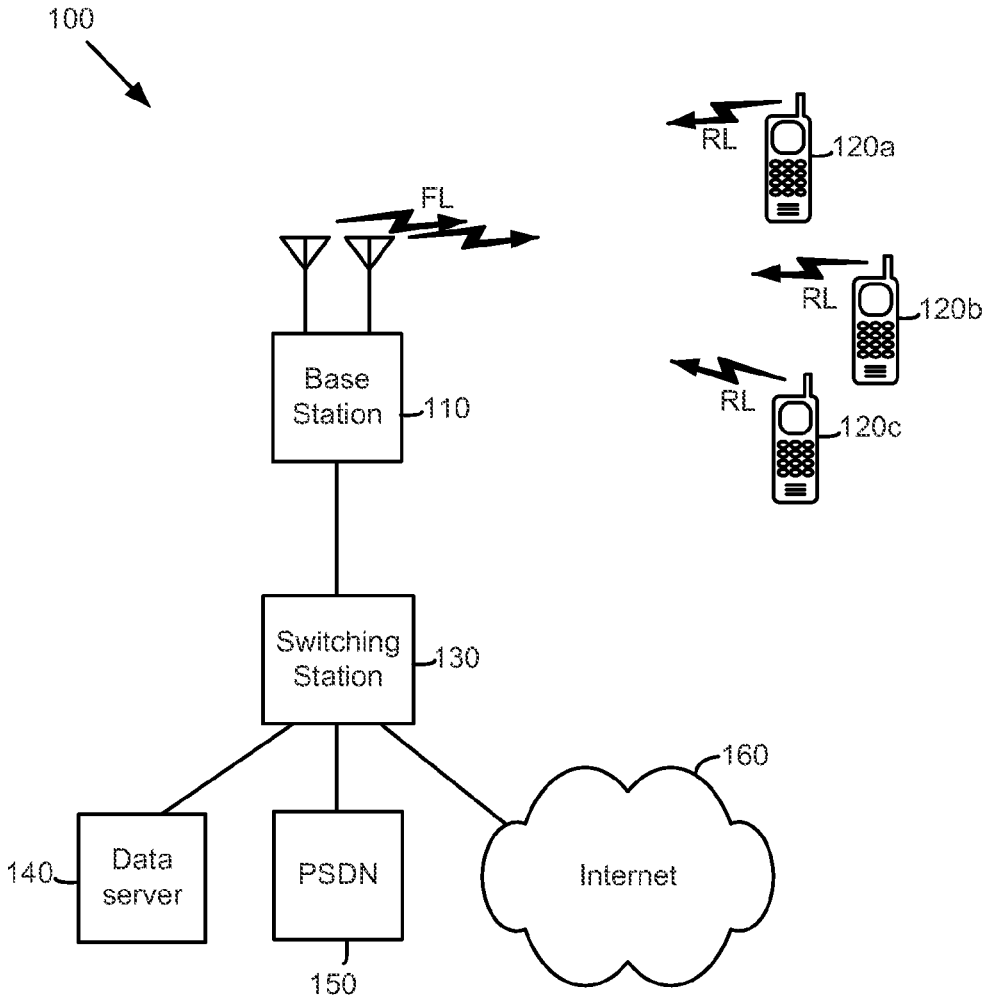
100
RL
120a
FL
RL
120b
Base Station
110
RL
120c
Switching Station
130
160
140
Data server
PSDN
Internet
150

FIG. 1