LASER TOOL APPARATUS

Filed Nov. 1, 1965 4 Sheets-Sheet 2

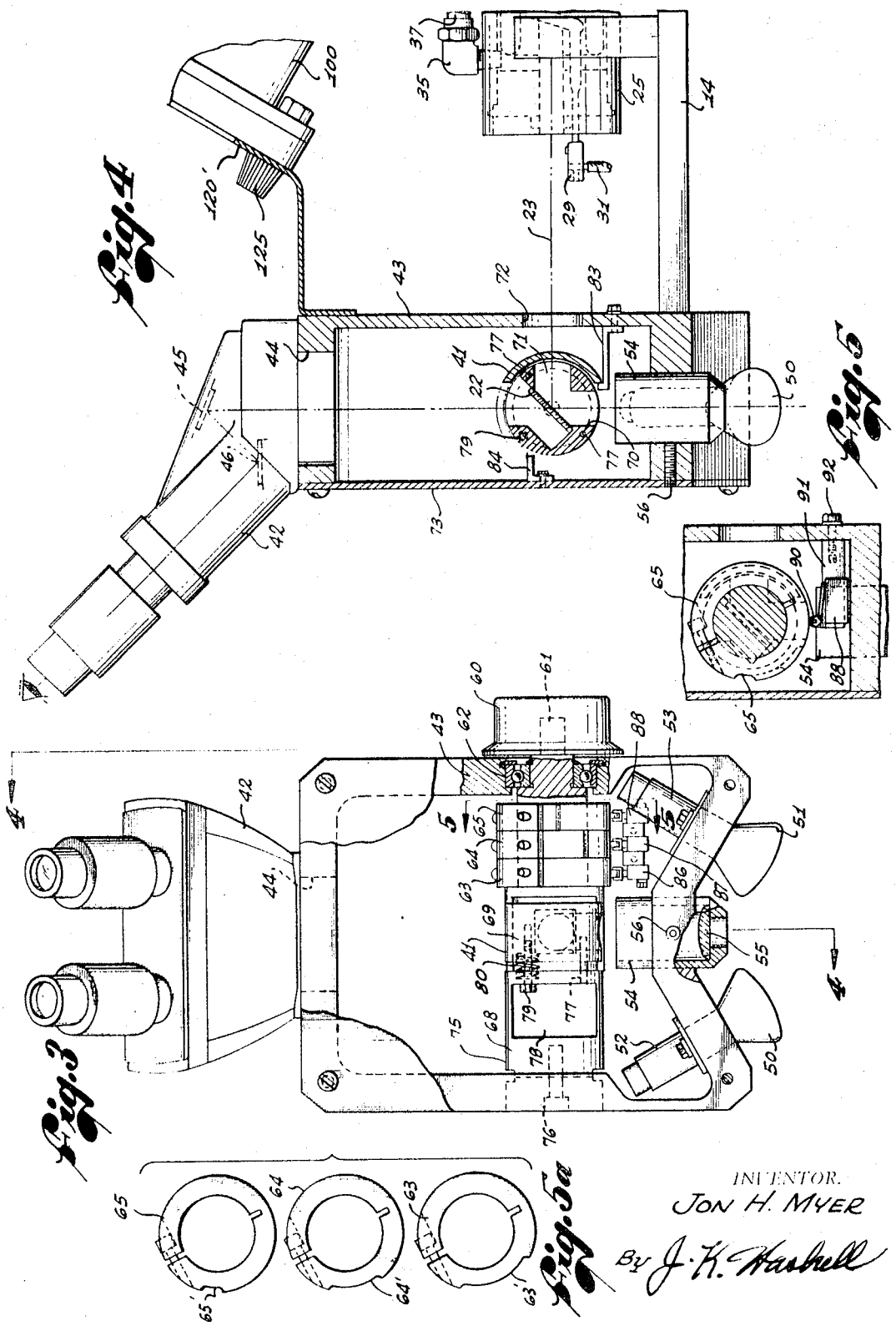


INVENTOR.
JON H. MYER
By J. K. Haskell