219-121 CROSS REFERENCE SEARCH ROOM

Aug. 26, 1969 J. H. MYER 3,463,594

LASER TOOL APPARATUS

Filed Nov. 1, 1965 4 Sheets-Sheet 1

Fig. 1

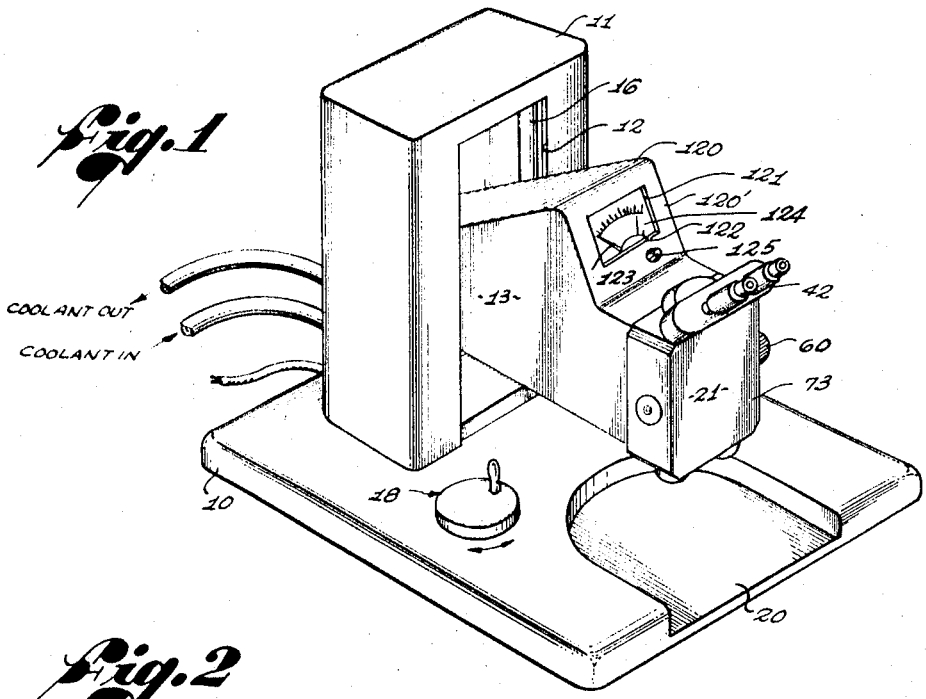

Fig. 2

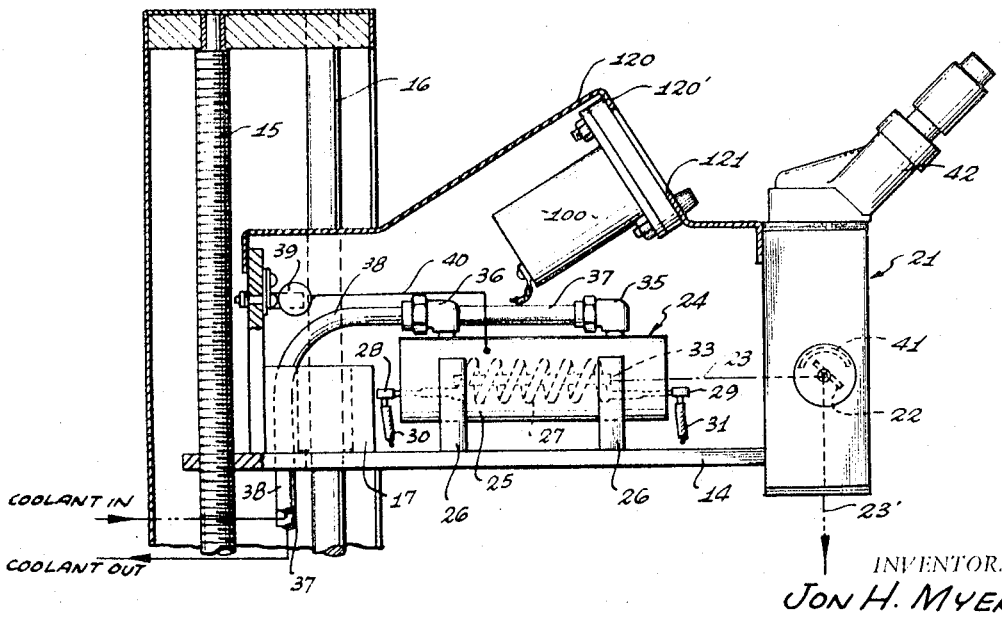

INVENTOR.
JON H. MYER
BY J. K. Haskell