4 Sheets—Sheet 1.

I. M. SINGER.

Sewing Machine.

No. 8,294.

Patented Aug. 12, 1851.

Fig. 1.

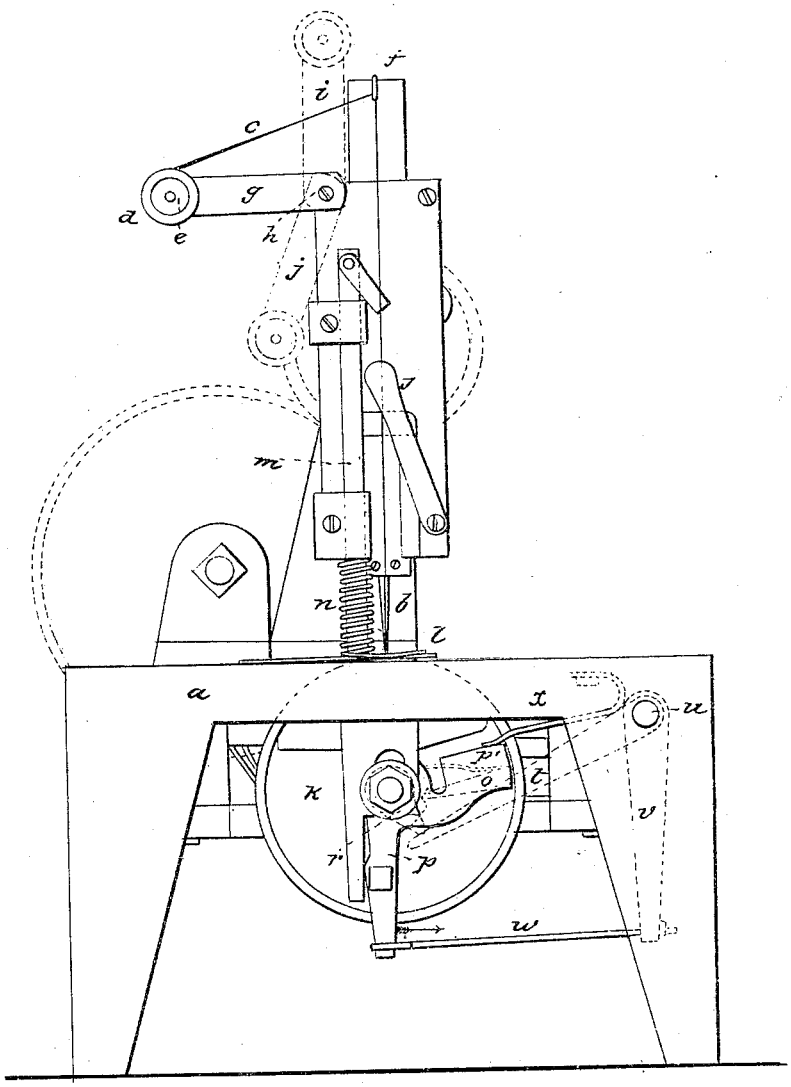

THE NORRIS PETERS CO., PHOTO-LITHO., WASHINGTON, D. C.