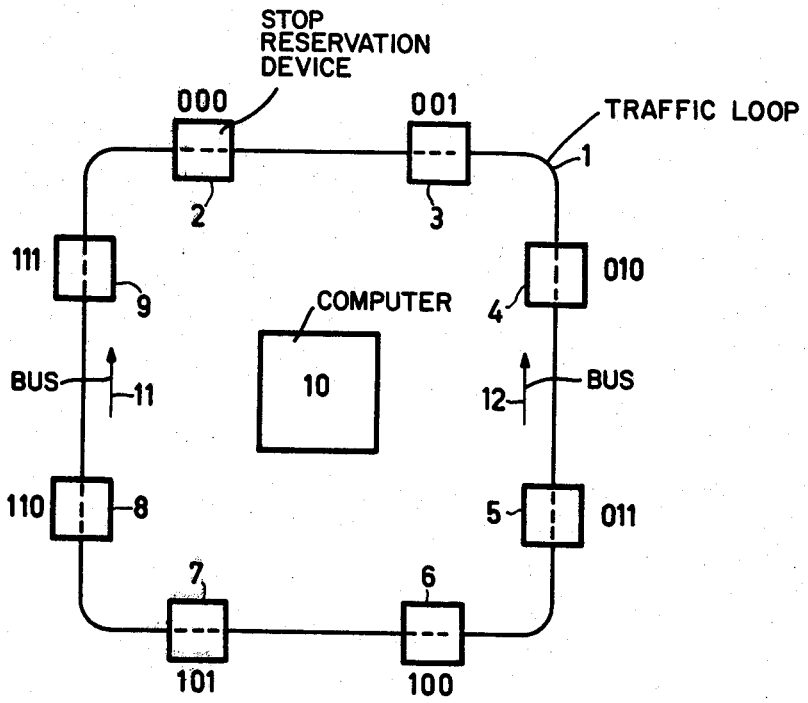
STOP
RESERVATION
DEVICE
000
001
TRAFFIC LOOP
1
2
3
111
9
010
4
COMPUTER
10
BUS
11
12
BUS
110
8
5
011
7
6
101
100

Fig.1

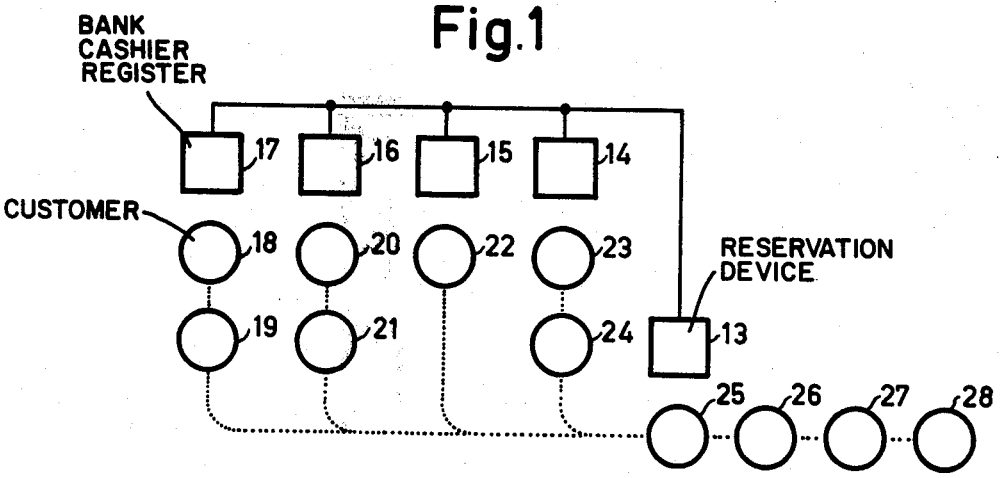
BANK
CASHIER
REGISTER
17
16
15
14
CUSTOMER
18
20
22
23
RESERVATION
DEVICE
19
21
24
13
25
26
27
28

Fig. 2