Oct. 30, 1951 C. L. NORDEN ET AL 2,573,593

SERVOMOTOR

Filed Jan. 31, 1947 2 SHEETS—SHEET 1

Fig. 1.

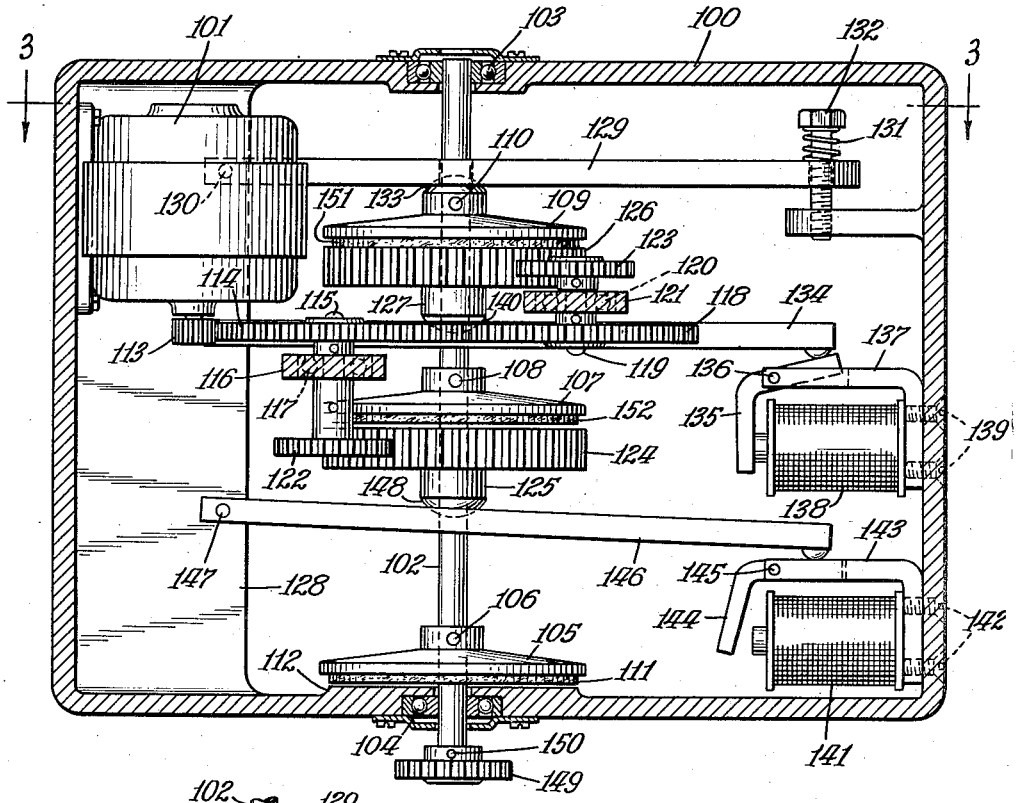

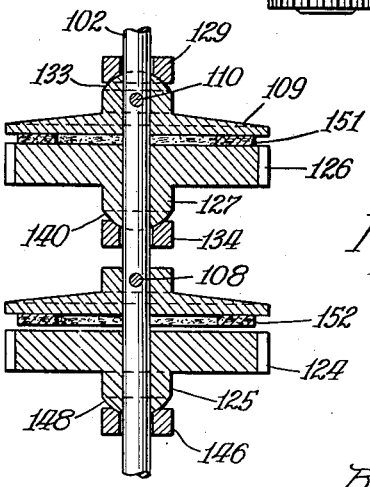

Fig. 2.

Inventors
Carl L. Norden
Theodore H. Barth
By Henry L. Scheuer
Atty.