(No Model.) 5 Sheets—Sheet 1.

M. E. BEASLEY & E. M. HUGENTOBLER

BARREL MAKING MACHINE.

No. 300,193. Patented June 10, 1884.

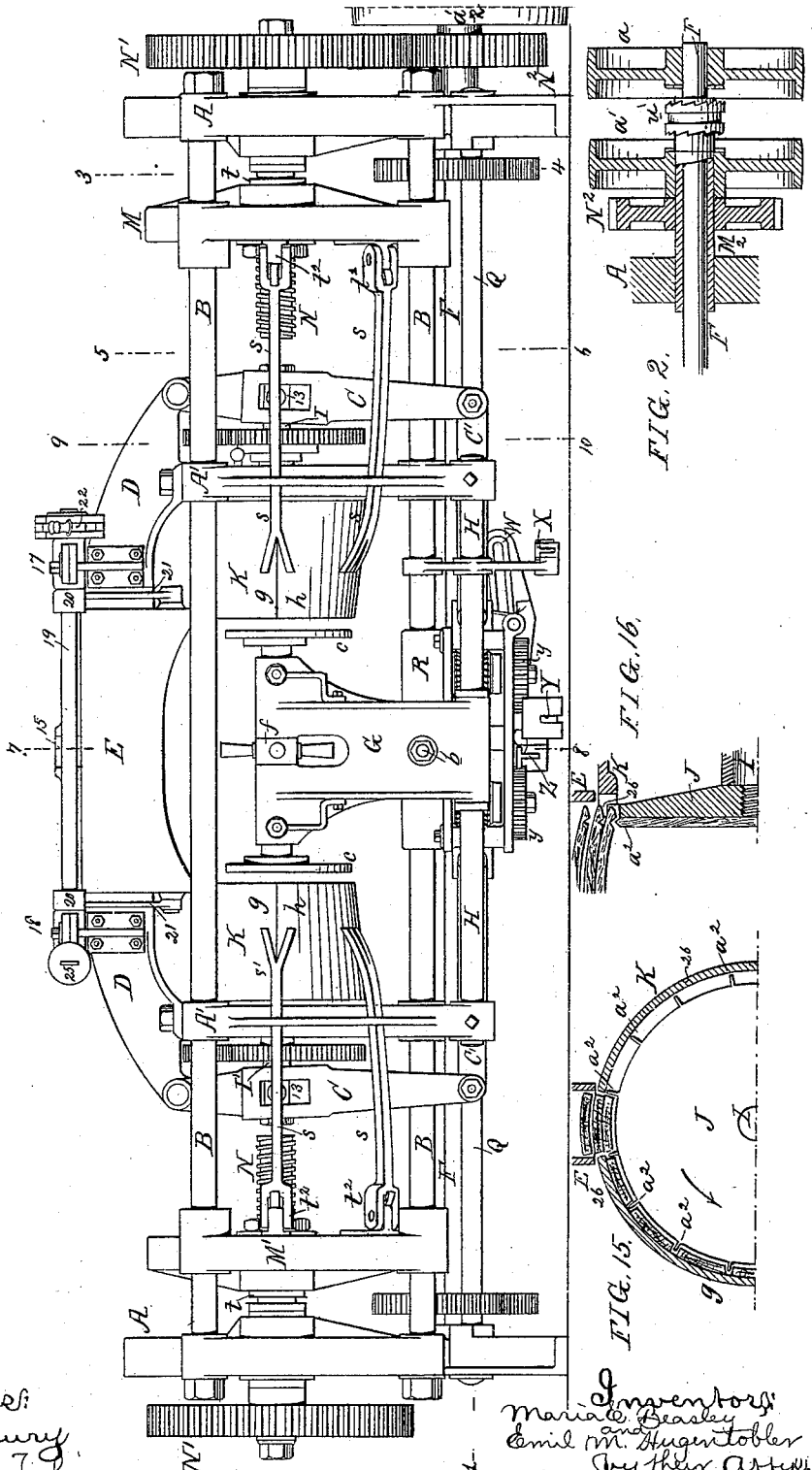

Witnesses:
Harry Drury
James J. Jobins

Inventors:
Maria E. Beasley
and
Emil M. Hugentobler
by their Attys.
Howson & Sons

N. PETERS, Photo-Lithographer, Washington, D. C.