FIG. 1

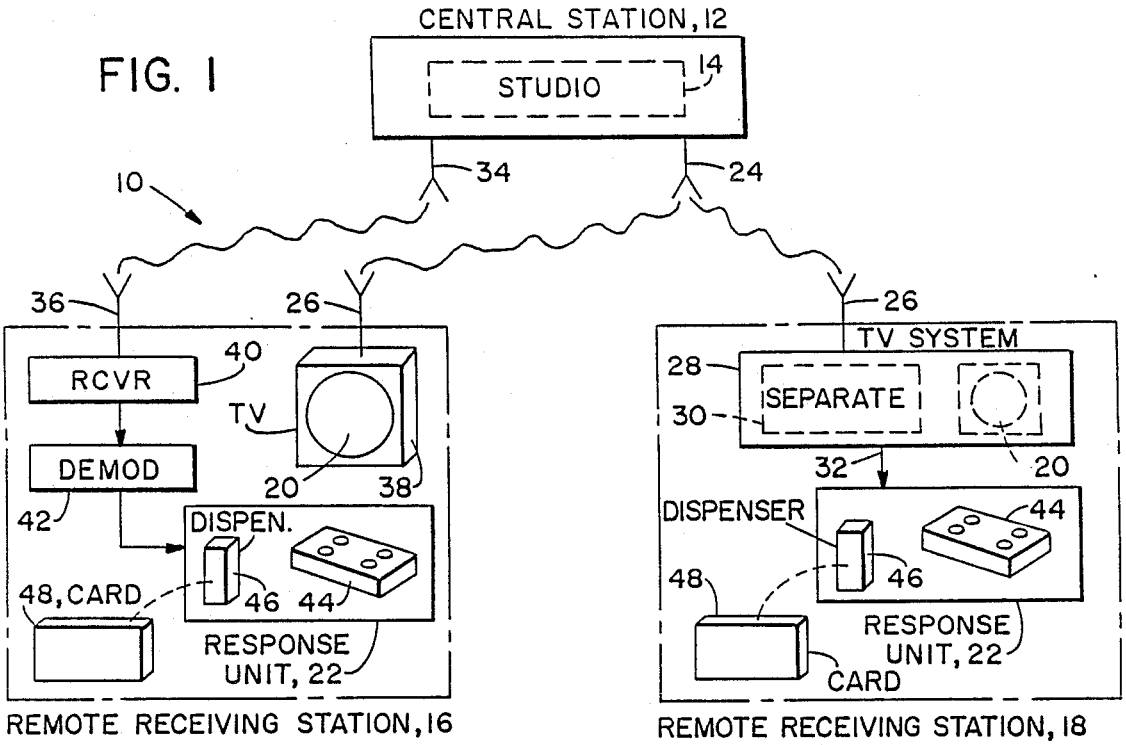
CENTRAL STATION, 12
STUDIO
14
34
24
10
36
26
26
RCVR
40
TV
DEMOD
20
38
42
DISPEN.
48, CARD
46
44
RESPONSE UNIT, 22
REMOTE RECEIVING STATION, 16
TV SYSTEM
28
SEPARATE
30
32
20
DISPENSER
44
48
46
RESPONSE UNIT, 22
CARD
REMOTE RECEIVING STATION, 18

FIG. 4

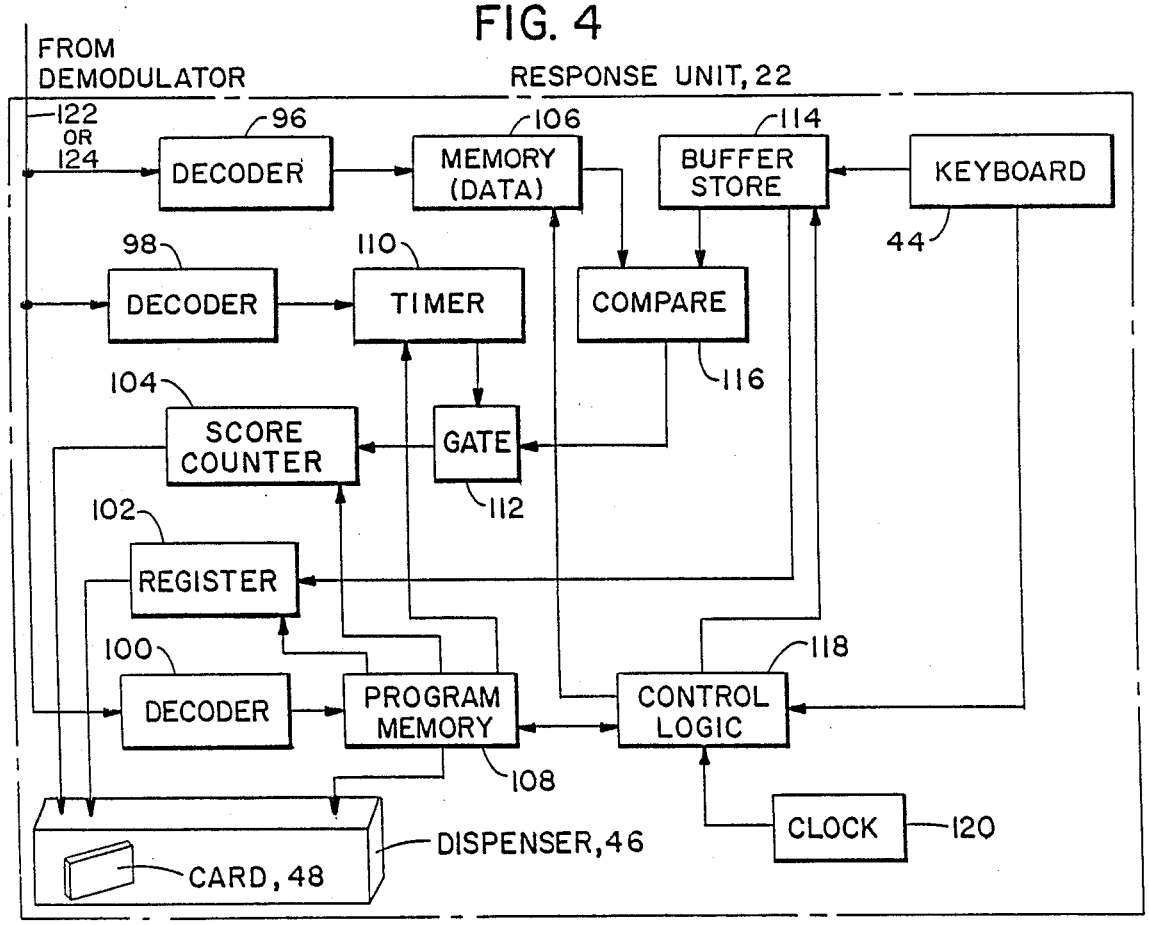
FROM DEMODULATOR
RESPONSE UNIT, 22
122 OR 124
DECODER
96
MEMORY (DATA)
106
BUFFER STORE
114
KEYBOARD
44
DECODER
98
TIMER
110
COMPARE
116
SCORE COUNTER
104
GATE
112
REGISTER
102
DECODER
100
PROGRAM MEMORY
108
CONTROL LOGIC
118
CLOCK
120
DISPENSER, 46
CARD, 48