US009429992B1

(12) **United States Patent**
Ashenbrenner et al.

(10) **Patent No.: US 9,429,992 B1**
(45) **Date of Patent: Aug. 30, 2016**

(54) **WIRED AND WIRELESS DOCKING STATION**

(75) Inventors: **Robert Ashenbrenner**, Austin, TX (US); **Phillip Bagwell**, Georgetown, TX (US)

(73) Assignee: **Motion Computing, Inc.**, Austin, TX (US)

(*) Notice: Subject to any disclaimer, the term of this patent is extended or adjusted under 35 U.S.C. 154(b) by 1523 days.

(21) Appl. No.: **11/868,654**

(22) Filed: **Oct. 8, 2007**

(51) **Int. Cl.**
H04B 1/38 (2015.01)
G06F 1/16 (2006.01)
G06F 13/40 (2006.01)

(52) **U.S. Cl.**
CPC ***G06F 1/1632*** (2013.01); ***G06F 13/4081*** (2013.01)

(58) **Field of Classification Search**
USPC 455/557
See application file for complete search history.

(56) **References Cited**

U.S. PATENT DOCUMENTS

5,930,368	A	7/1999	Hocker et al.	
5,964,847	A	10/1999	Booth, III et al.	
6,081,536	A	6/2000	Gorsuch et al.	
6,359,872	B1	3/2002	Mahany et al.	
6,600,734	B1	7/2003	Gernert et al.	
6,678,253	B1	1/2004	Heath, Jr. et al.	
6,778,824	B2	8/2004	Wonak et al.	
6,915,135	B1	7/2005	McKee et al.	
7,076,270	B2	7/2006	Jaggers et al.	
7,089,034	B1	8/2006	Schornack et al.	
7,110,789	B1	9/2006	Curtiss et al.	
7,165,725	B2	1/2007	Casey	
7,190,954	B2	3/2007	Wonak et al.	
7,231,481	B2	6/2007	Scott et al.	
7,471,651	B2	12/2008	Mahany et al.	
7,787,821	B2	8/2010	Hamaguchi	
2004/0148445	A1*	7/2004	Lee et al.	710/72
2005/0246470	A1	11/2005	Brenner	
2006/0026326	A1	2/2006	Hunt et al.	
2006/0133290	A1*	6/2006	Lindoff et al.	370/252
2006/0172715	A1*	8/2006	Carballo et al.	455/127.2
2007/0079048	A1	4/2007	Starr et al.	
2008/0195788	A1	8/2008	Tamir et al.	

OTHER PUBLICATIONS

"How Terminal Services Works," Microsoft Corp., Mar. 28, 2003, 14 pages.
Stokes, "PCI Express: An Overview," Jul. 7, 2004, 20 pages.
(Continued)

Primary Examiner — Hsin-Chun Liao
(74) *Attorney, Agent, or Firm* — Egan, Peterman, Enders & Huston LLP

(57) **ABSTRACT**

A portable computer, system, and method for a wired and wireless docking station are provided. The portable computer may function to connect to a docking station via either a wired or wireless channel of communication depending on the signal strength of a wireless communication as determined by a comparator, or depending on whether it has been physically connected to a docking station. The system may also be modular so that it can be acquired by a computer user as separate modules, and may provide support for charging an additional battery through a power connection that is separate from the docking connector. A process is also provided that allows a portable computer user to automatically commence and switch between wired and wireless docking sessions by either placing the computer either within range of the docking station or by connecting it to the docking station with a docking station connector.
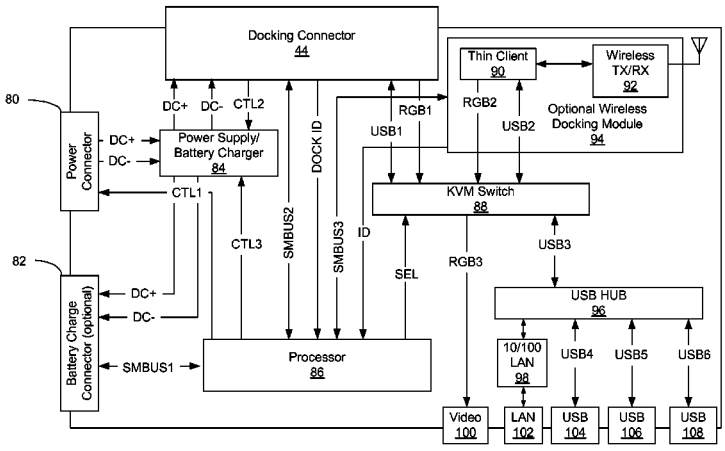
18 Claims, 6 Drawing Sheets