Nov. 4, 1952 R. C. BIRD 2,616,692

ADJUSTABLE BATTING TEE

Filed Feb. 13, 1950

Fig. 1.

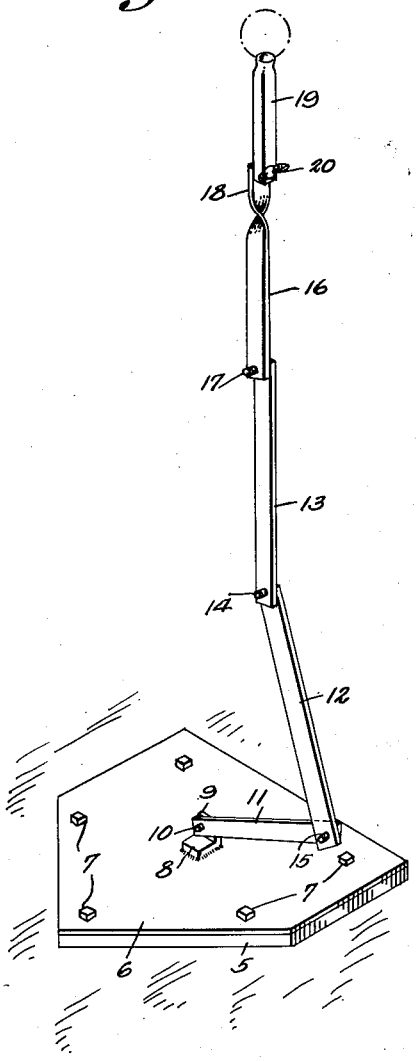

Fig. 2.

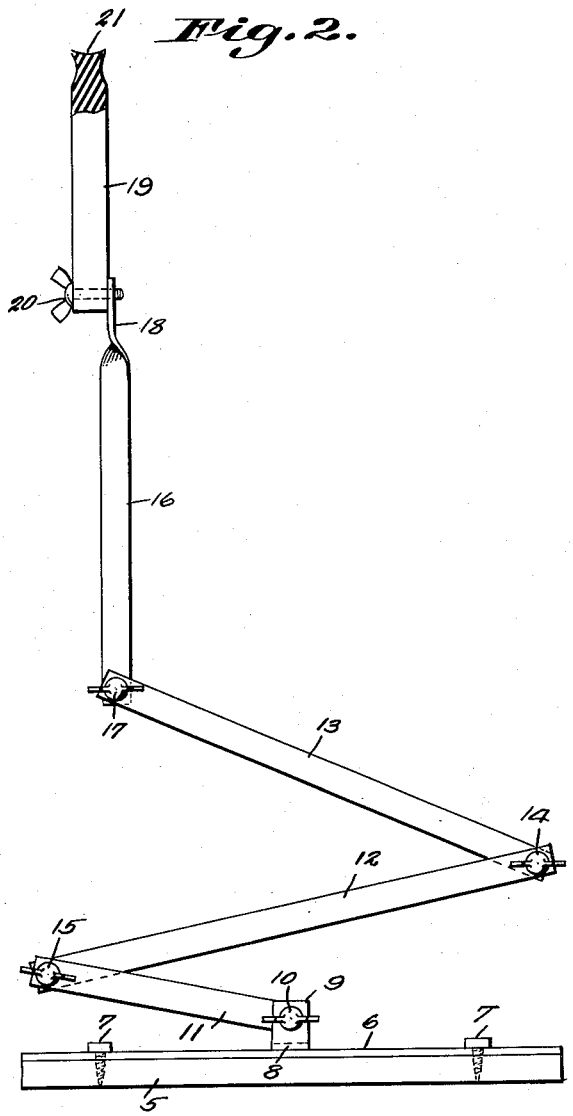

Roy C. Bird

INVENTOR

BY C. A. Snow & Co.

ATTORNEYS.