April 16, 1935. F. H. SHERMAN Des. 95,291

CONTAINER FOR FRAGILE ARTICLES

Filed Nov. 12, 1934

Fig. 1.

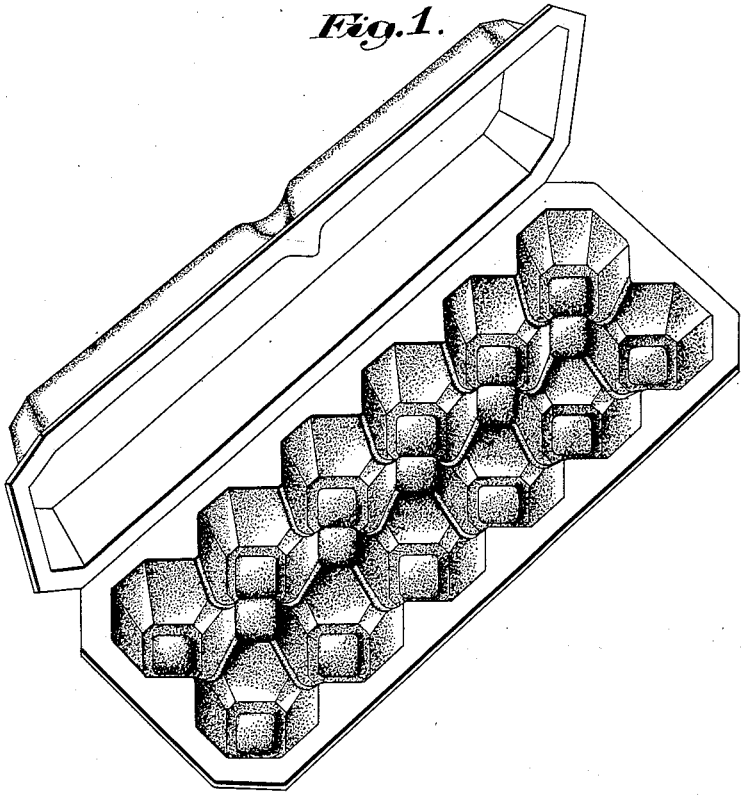

Fig. 2.

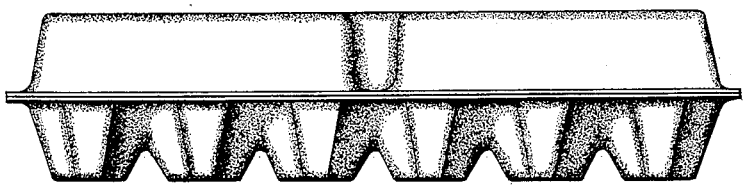

Fig. 3

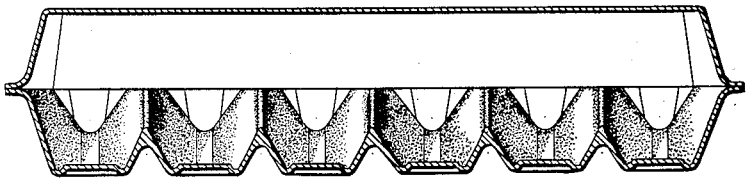

Inventor
Francis H. Sherman,
by Emery, Booth, Varney and Townsend Attys