US008991091B2

(12) **United States Patent**
Griffin

(10) **Patent No.: US 8,991,091 B2**
(45) **Date of Patent: Mar. 31, 2015**

(54) **UNIVERSAL LAUNCHER SYSTEM**

(71) Applicant: **RM Equipment, Inc.**, Miami, FL (US)

(72) Inventor: **Todd Griffin**, Miami, FL (US)

(73) Assignee: **RM Equipment, Inc.**, Miami, FL (US)

(*) Notice: Subject to any disclaimer, the term of this patent is extended or adjusted under 35 U.S.C. 154(b) by 89 days.

(21) Appl. No.: **13/740,902**

(22) Filed: **Jan. 14, 2013**

(65) **Prior Publication Data**

US 2015/0000173 A1 Jan. 1, 2015

(51) **Int. Cl.**
F41C 27/06 (2006.01)

(52) **U.S. Cl.**
CPC ***F41C 27/06*** (2013.01)
USPC **42/105**

(58) **Field of Classification Search**
USPC 42/72, 73, 71.01, 75.03, 75.01; 89/128
See application file for complete search history.

(56) **References Cited**

U.S. PATENT DOCUMENTS

2,483,711	A	*	10/1949	Roos	396/426
3,318,192	A	*	5/1967	Sullivan et al.	89/142
3,939,589	A	*	2/1976	Tellie	42/71.01
4,358,986	A	*	11/1982	Giorgio	89/142
4,733,489	A		3/1988	Kurak	
4,788,785	A	*	12/1988	White	42/72
5,235,771	A	*	8/1993	Sokol et al.	42/105
5,930,935	A		8/1999	Griffin	
6,134,823	A		10/2000	Griffin	
7,328,530	B2		2/2008	Griffin	
7,673,412	B2		3/2010	Griffin	
7,827,721	B2		11/2010	Griffin	
7,891,130	B2		2/2011	Griffin	
8,286,382	B2	*	10/2012	Vesligai	42/75.03
2010/0162608	A1	*	7/2010	McCann	42/71.01
2011/0198471	A1	*	8/2011	Marquez	248/316.4
2014/0007763	A1	*	1/2014	Foster	89/136

FOREIGN PATENT DOCUMENTS

WO WO-2012099876 A1 7/2012

* cited by examiner

Primary Examiner — Reginald Tillman, Jr.
(74) *Attorney, Agent, or Firm* — Nawrocki, Rooney & Sivertson, P.A.

(57) **ABSTRACT**

A launcher system, advantageously in kit form, is provided. The system generally includes a launching device, a pistol grip frame, and stock assembly. The pistol grip frame is characterized by a frame body and a pistol grip extending therefrom, the frame body having a first frame body portion adapted for select operative union with the launching device, and a second frame body portion adapted for select operative union with the stock assembly. The stock assembly is adapted for select operative union with the second frame body portion of the frame body of the pistol grip frame. No-tool select operator union of elements of the system is enabled.
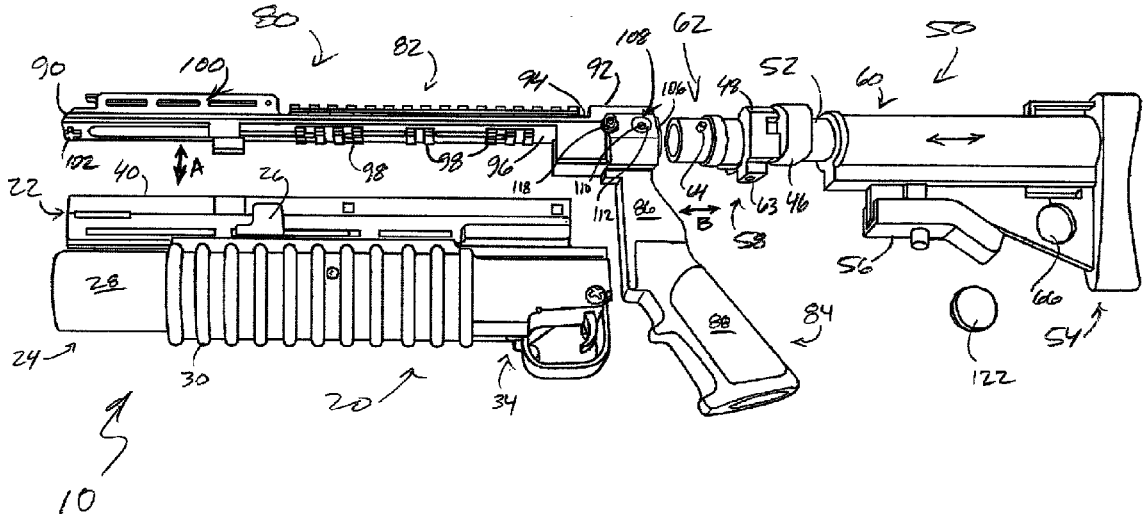
18 Claims, 5 Drawing Sheets