No. 755,091. PATENTED MAR. 22, 1904.

J. A. WILLIAMS.

TELEPHONE TRANSMITTER.

APPLICATION FILED APR. 10, 1903.

NO MODEL.

Fig. 1.

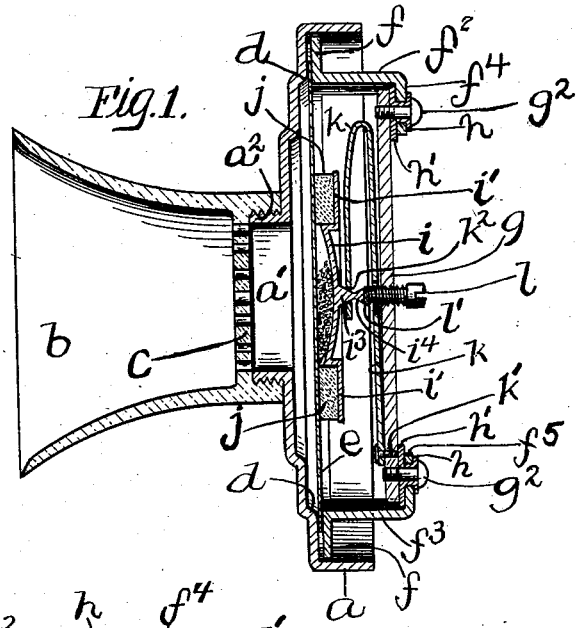

Fig. 2.

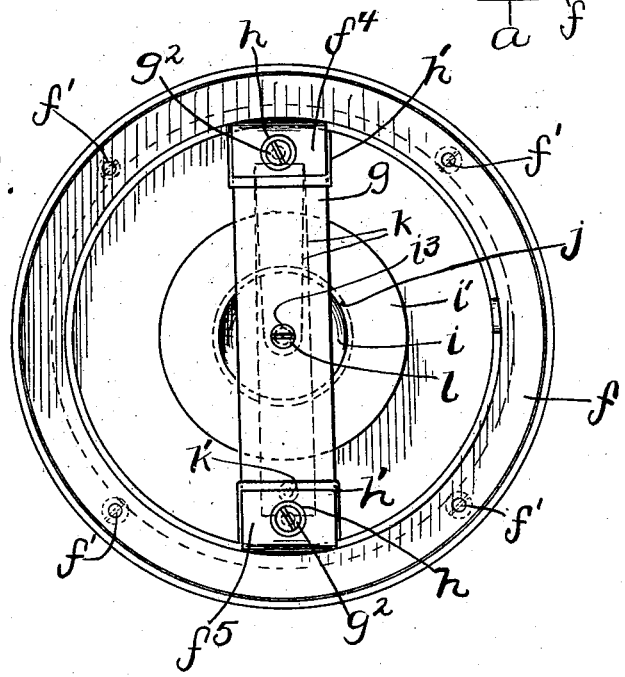

WITNESSES:
Daniel E. Daly.
Victor C. Lynch.

INVENTOR
Joseph A. Williams
BY
Lynch & Dorer
his ATTORNEYS.

THE NORRIS PETERS CO., PHOTO-LITHO., WASHINGTON, D. C.