Oct. 7, 1952 R. L. FOWLER 2,612,691

ELLIPSOGRAPH

Filed Feb. 18, 1952 2 SHEETS—SHEET 1

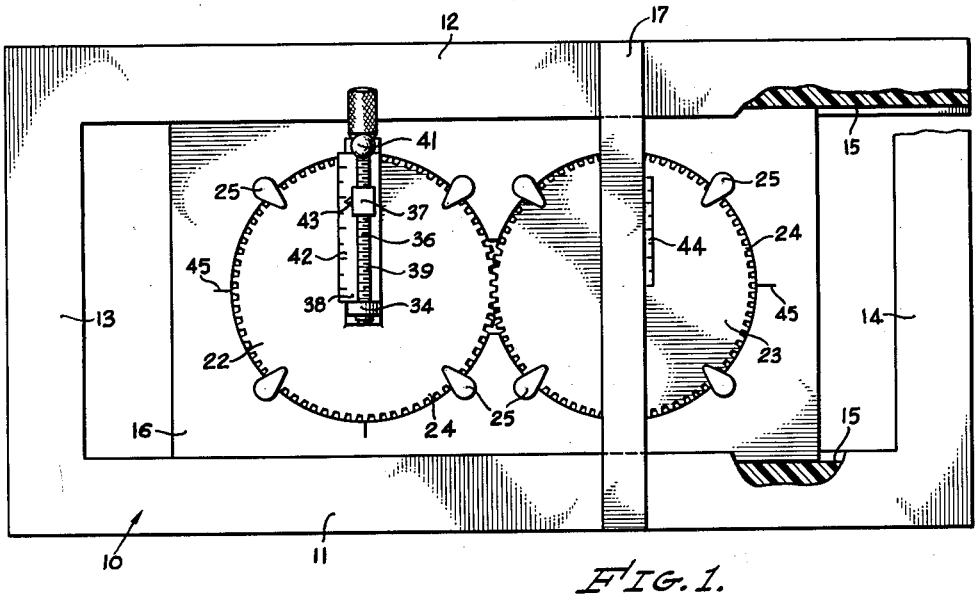

FIG. 1.

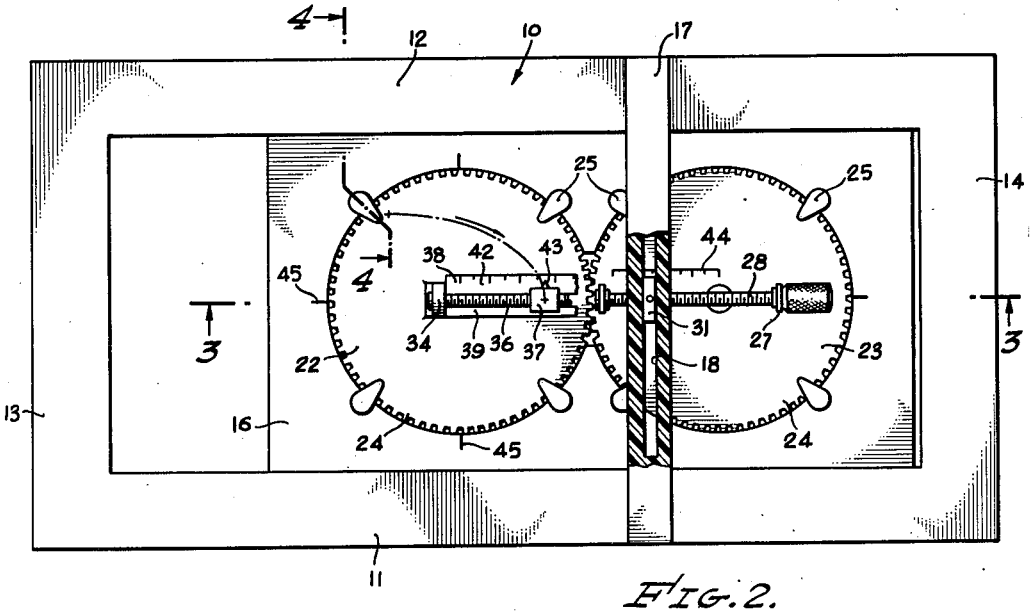

FIG. 2.

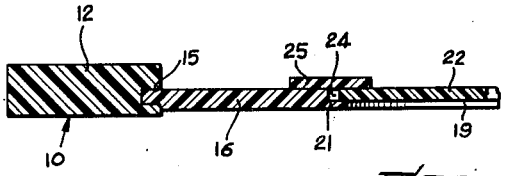

FIG. 4.

RALPH L. FOWLER,
INVENTOR.

BY Hazard & Miller

ATTORNEYS