No. 892,790.

J. A. WILLIAMS.

PATENTED JULY 7, 1908.

COMPOUND EXPLOSIVE ENGINE.

APPLICATION FILED JUNE 7, 1905.

2 SHEETS—SHEET 2.

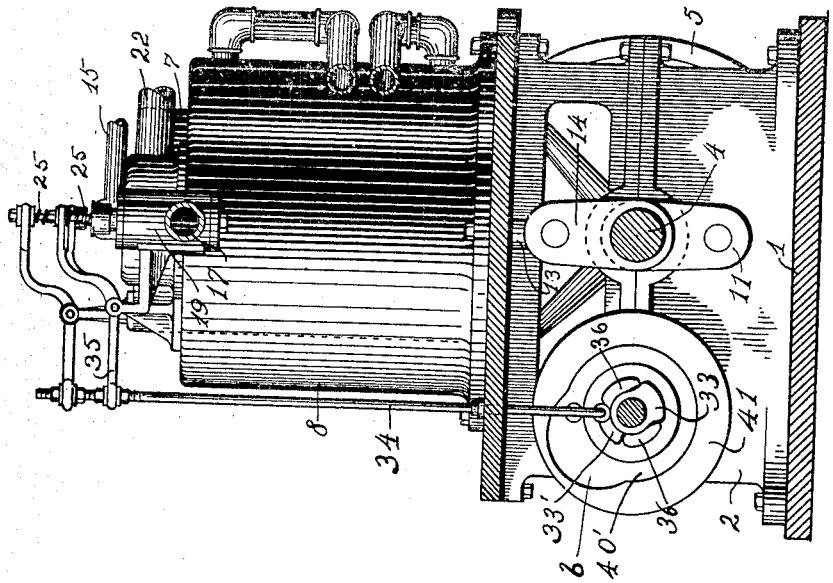


FIG. 3.

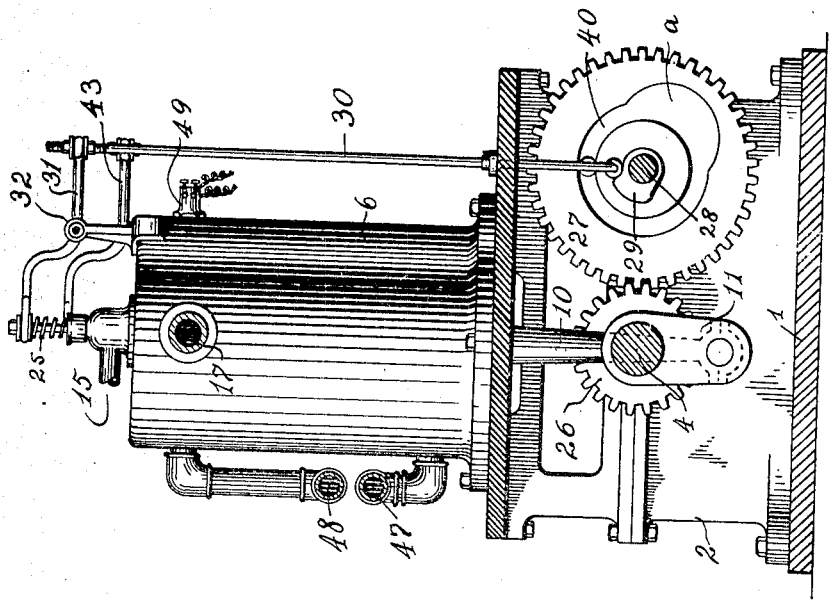


FIG. 2.

WITNESSES:

Brennan & West.

E. McElroy.

Joseph A. Williams, INVENTOR.

BY

Fowler & Hull, ATTORNEY.