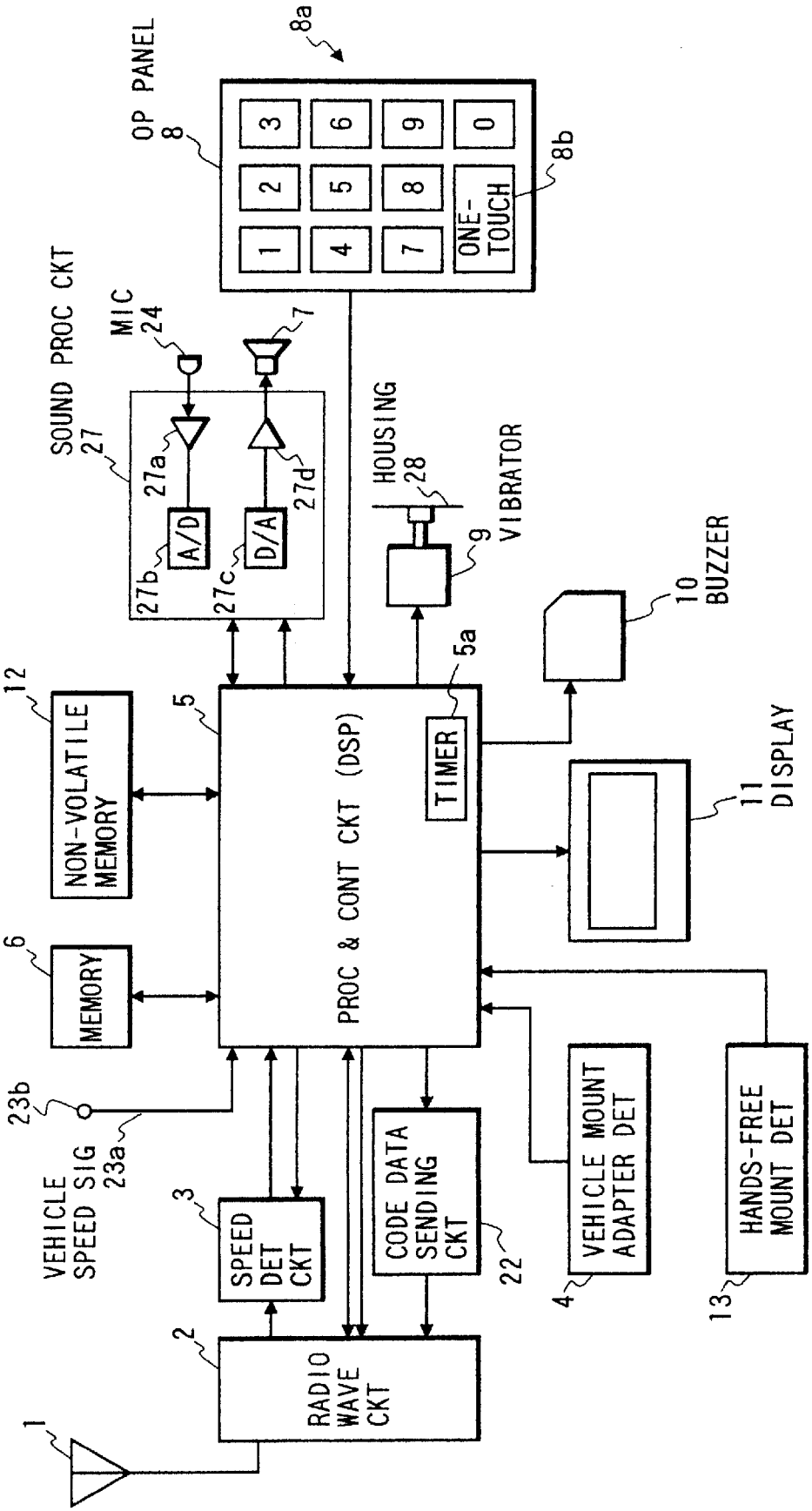
OP PANEL
8
8a
1
2
3
4
5
6
7
8
9
0
ONE-TOUCH
8b
SOUND PROC CKT
27
MIC
24
7
27a
27d
A/D
D/A
27b
27c
HOUSING
28
VIBRATOR
9
10
BUZZER
12
NON-VOLATILE MEMORY
5
PROC & CONT CKT (DSP)
TIMER
5a
11
DISPLAY
6
MEMORY
23b
23a
VEHICLE SPEED SIG
3
SPEED DET CKT
CODE DATA SENDING CKT
22
VEHICLE MOUNT ADAPTER DET
4
HANDS-FREE MOUNT DET
13
2
RADIO WAVE CKT
1

FIG. 1