US010162090B1

(12) **United States Patent**
Frankel et al.

(10) **Patent No.: US 10,162,090 B1**
(45) **Date of Patent: Dec. 25, 2018**

(54) **CONFORMABLE REFLECTIVE FILM HAVING SPECIFIED REFLECTIVITY WHEN STRETCHED AT ROOM TEMPERATURE**

(71) Applicant: **3M INNOVATIVE PROPERTIES COMPANY**, St. Paul, MN (US)

(72) Inventors: **Joan M. Frankel**, Woodbury, MN (US); **Kevin D. Hagen**, St. Paul, MN (US); **Michael A. Johnson**, Stillwater, MN (US); **Diane North**, Inver Grove Heights, MN (US); **James A. Phipps**, River Falls, WI (US); **Audrey A. Sherman**, Woodbury, MN (US); **Huiwen Tai**, Lake Elmo, MN (US)

(73) Assignee: **3M INNOVATIVE PROPERTIES COMPANY**, Saint Paul, MN (US)

(*) Notice: Subject to any disclaimer, the term of this patent is extended or adjusted under 35 U.S.C. 154(b) by 0 days.

(21) Appl. No.: **15/899,457**

(22) Filed: **Feb. 20, 2018**

(51) **Int. Cl.**

G02B 5/08	(2006.01)
G02B 5/10	(2006.01)
B32B 15/08	(2006.01)
G02B 5/26	(2006.01)
B32B 38/00	(2006.01)
B60R 13/04	(2006.01)

(52) **U.S. Cl.**
CPC ***G02B 5/26*** (2013.01); ***G02B 5/0866*** (2013.01); *B32B 15/08* (2013.01); *B32B 2038/0028* (2013.01); *B32B 2307/406* (2013.01); *B32B 2307/416* (2013.01); *B32B 2307/51* (2013.01); *B60R 13/04* (2013.01); *G02B 5/0858* (2013.01); *G02B 5/0875* (2013.01)

(58) **Field of Classification Search**
CPC B32B 15/04; B32B 15/043; B32B 15/06; B32B 15/08–15/098; B32B 2038/0028; B32B 2307/406; B32B 2307/416; B32B 2307/51; B32B 2551/00; B32B 2551/08; B60R 13/00; B60R 13/005; B60R 13/02; B60R 13/04; G02B 5/0284; G02B 5/08; G02B 5/0808; G02B 5/085; G02B 5/0858; G02B 5/0866; G02B 5/0875; G02B 5/10
USPC 359/599, 615, 838, 846–848, 868–871, 359/883, 884, 896; 428/31, 332–336, 428/412, 418, 423.1, 425.8, 425.9, 428/457–463, 474.4, 480, 500, 688, 689, 428/697
See application file for complete search history.

(56) **References Cited**

U.S. PATENT DOCUMENTS

RE24,906	E	12/1960	Ulrich
3,239,478	A	3/1966	Harlan, Jr.

(Continued)

FOREIGN PATENT DOCUMENTS

WO	WO 2006-102581	9/2006
WO	WO 2006-102592	9/2006

(Continued)

Primary Examiner — Jennifer D Carruth
Assistant Examiner — Ryan S Dunning
(74) *Attorney, Agent, or Firm* — Daniel J. Iden

(57) **ABSTRACT**

The present disclosure includes a stretchable reflective film comprising a transparent polymer layer; a continuous metal layer comprising at least one of tin or indium; a non-reactive adhesive layer; and a stretchable film layer. The stretchable reflective film has at least 30% specular reflectivity when stretched by 50% of the unstretched length according to Specular Reflectivity Test Method.
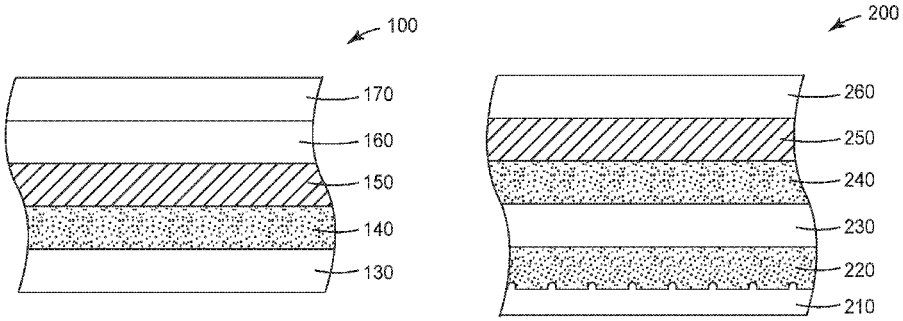
22 Claims, 1 Drawing Sheet