FIG.2

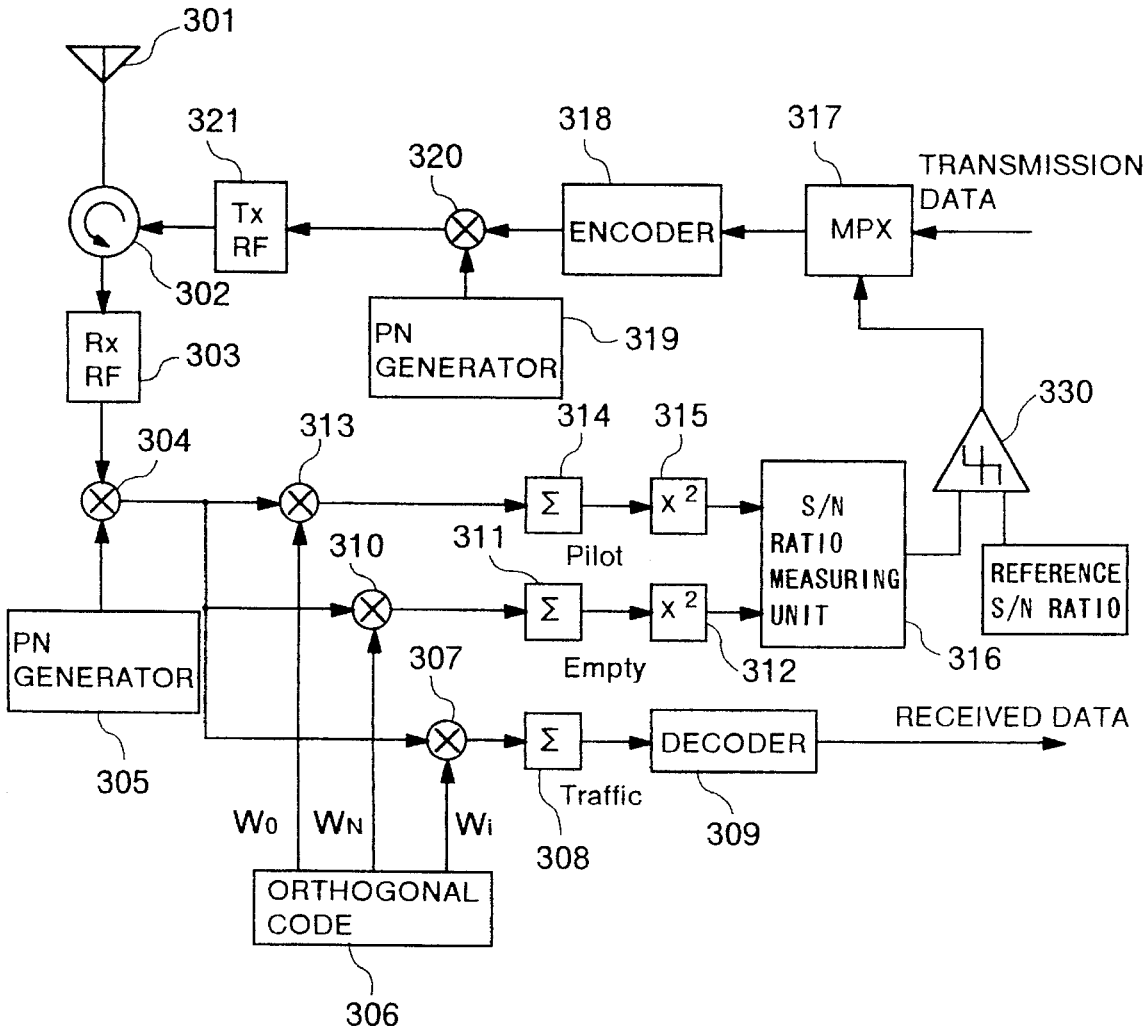
301
321
Tx
RF
320
318
ENCODER
317
MPX
TRANSMISSION
DATA
302
Rx
RF
303
PN
GENERATOR
319
330
304
313
314
315
Σ
x 2
S/N
RATIO
MEASURING
UNIT
REFERENCE
S/N RATIO
310
311
Pilot
Σ
x 2
312
316
PN
GENERATOR
307
Empty
Σ
DECODER
RECEIVED DATA
305
Traffic
W0
WN
Wi
308
309
ORTHOGONAL
CODE
306