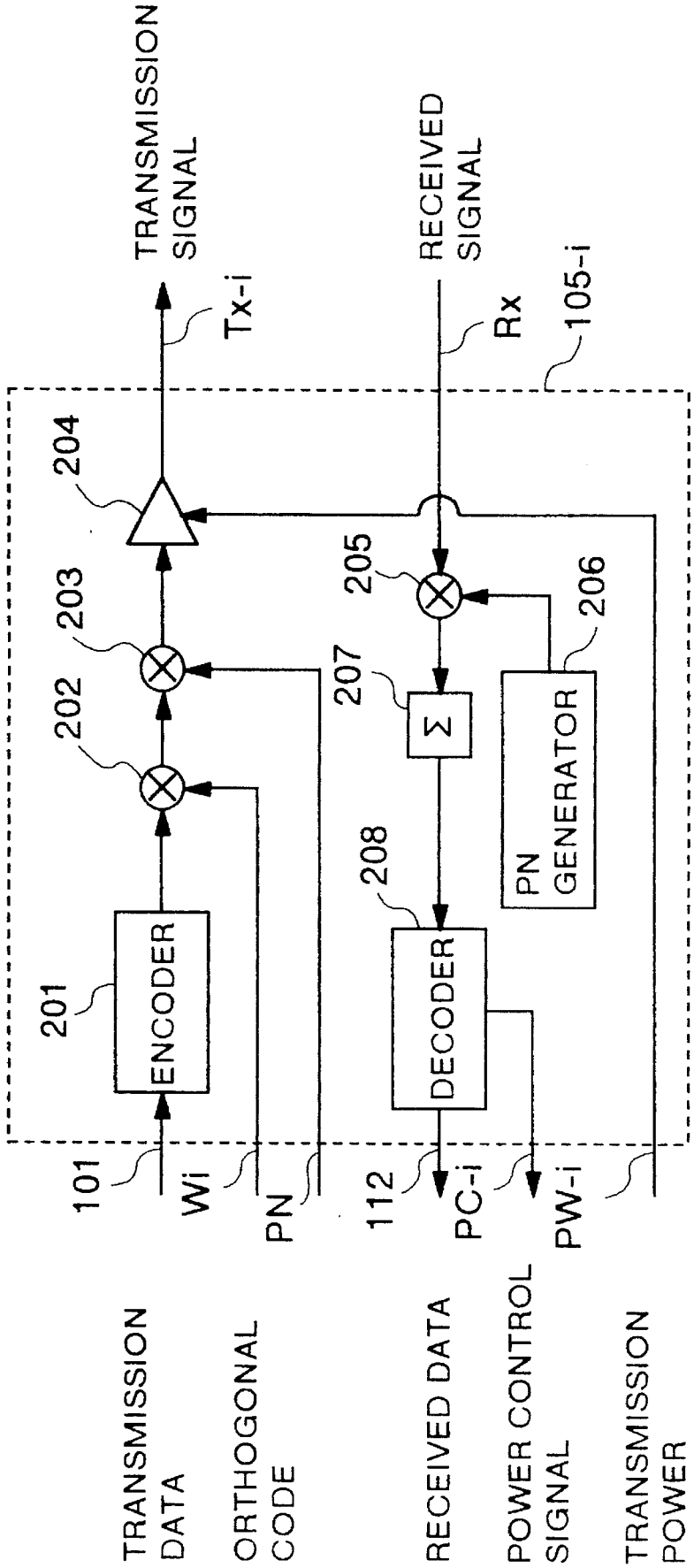FIG.14 PRIOR ART