US010336290B1

(12) **United States Patent**
Lazaro et al.

(10) **Patent No.: US 10,336,290 B1**
(45) **Date of Patent: Jul. 2, 2019**

(54) **EXTENDABLE BUMPERS FOR VEHICLES**

(71) Applicants: **Juan A. Lazaro**, San Jose, CA (US); **Erik Mikael Fermer**, Sunnyvale, CA (US); **Alice C. Watts**, Cupertino, CA (US); **Tommaso P. Rivellini**, Sunnyvale, CA (US); **Christian Schermaier**, Mountain View, CA (US); **John Raff**, Menlo Park, CA (US); **Derek C. Scott**, Santa Clara, CA (US); **David E. Kingman**, Campbell, CA (US); **Bryce A. Woollard**, Carpentersville, IL (US); **Samuel G. Fowle**, San Francisco, CA (US); **Mark B. Rober**, Cupertino, CA (US); **Ibuki Kamei**, Santa Clara, CA (US); **Donald R. Monroe**, Los Gatos, CA (US); **Jesse T. Buehler**, Los Altos, CA (US); **Paul D. Yeomans**, Morgan Hill, CA (US)

(72) Inventors: **Juan A. Lazaro**, San Jose, CA (US); **Erik Mikael Fermer**, Sunnyvale, CA (US); **Alice C. Watts**, Cupertino, CA (US); **Tommaso P. Rivellini**, Sunnyvale, CA (US); **Christian Schermaier**, Mountain View, CA (US); **John Raff**, Menlo Park, CA (US); **Derek C. Scott**, Santa Clara, CA (US); **David E. Kingman**, Campbell, CA (US); **Bryce A. Woollard**, Carpentersville, IL (US); **Samuel G. Fowle**, San Francisco, CA (US); **Mark B. Rober**, Cupertino, CA (US); **Ibuki Kamei**, Santa Clara, CA (US); **Donald R. Monroe**, Los Gatos, CA (US); **Jesse T. Buehler**, Los Altos, CA (US); **Paul D. Yeomans**, Morgan Hill, CA (US)

(73) Assignee: **Apple Inc.**, Cupertino, CA (US)

(*) Notice: Subject to any disclaimer, the term of this patent is extended or adjusted under 35 U.S.C. 154(b) by 41 days.

(21) Appl. No.: **15/355,674**

(22) Filed: **Nov. 18, 2016**

Related U.S. Application Data

(60) Provisional application No. 62/256,766, filed on Nov. 18, 2015.

(51) **Int. Cl.**

B60R 21/36	(2011.01)
B60R 19/20	(2006.01)
B60R 19/40	(2006.01)

(52) **U.S. Cl.**
CPC ***B60R 21/36*** (2013.01); ***B60R 19/205*** (2013.01); ***B60R 19/40*** (2013.01)

(58) **Field of Classification Search**
CPC ... B60R 21/36; B60R 21/0134; B60R 19/205; B60R 19/20; B60R 19/40; B60R 19/38; B60R 19/18
(Continued)

(56) **References Cited**

U.S. PATENT DOCUMENTS

3,741,598 A * 6/1973 Novak et al.
4,176,858 A 12/1979 Kornhauser
(Continued)

FOREIGN PATENT DOCUMENTS

CN	2637265	Y	9/2004
EP	1088707	A1 *	4/2001
WO	9708016	A2	3/1997

Primary Examiner — Keith J Frisby
(74) *Attorney, Agent, or Firm* — Young Basile Hanlon & MacFarlane, P.C.

(57) **ABSTRACT**
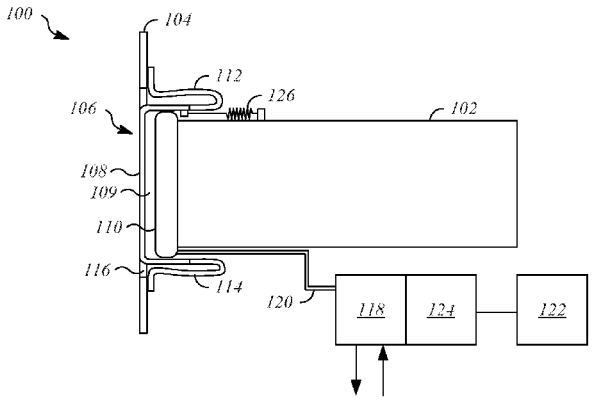
A vehicle includes a body portion, an opening defined by the body portion, and an extendable bumper that is positioned in the opening and is moveable with respect to the body portions between an extended position and a retracted position. The extendable bumper includes an inflatable structure
(Continued)