Oct. 1, 1929. H. C. MEYER 1,729,890

BOY SCOUT SIGNALING DEVICE

Filed May 2, 1928

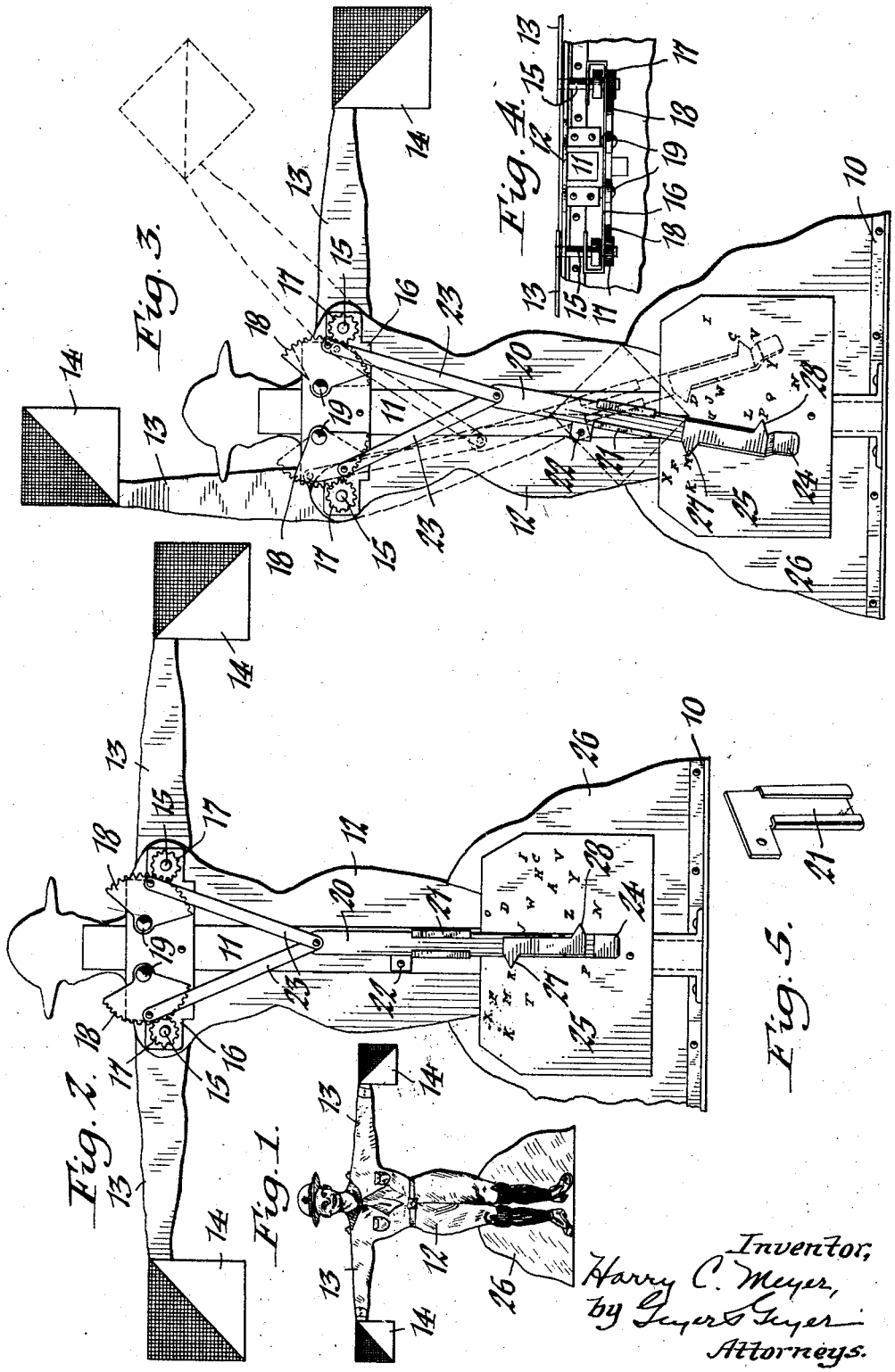

Inventor,
Harry C. Meyer,
by Geyer & Geyer
Attorneys.