US007219490B2

(12) **United States Patent**
Dev

(10) **Patent No.: US 7,219,490 B2**
(45) **Date of Patent: May 22, 2007**

(54) **NESTED CORE GAS TURBINE ENGINE**

(75) Inventor: **Sudarshan Paul Dev**, Seymour, CT (US)

(73) Assignee: **D-Star Engineering**, Shelton, CT (US)

(*) Notice: Subject to any disclaimer, the term of this patent is extended or adjusted under 35 U.S.C. 154(b) by 0 days.

(21) Appl. No.: **11/201,441**

(22) Filed: **Aug. 10, 2005**

(65) **Prior Publication Data**

US 2007/0012026 A1 Jan. 18, 2007

Related U.S. Application Data

(63) Continuation of application No. 10/635,956, filed on Aug. 7, 2003, now Pat. No. 6,988,357, which is a continuation of application No. 09/947,002, filed on Sep. 5, 2001, now Pat. No. 6,647,707.

(60) Provisional application No. 60/230,891, filed on Sep. 5, 2000.

(51) **Int. Cl.**
F02K 3/02 (2006.01)

(52) **U.S. Cl.** **60/226.1**; 60/262

(58) **Field of Classification Search** 60/226.1, 60/262, 263, 770
See application file for complete search history.

(56) **References Cited**

U.S. PATENT DOCUMENTS

2,430,399	A	11/1947	Heppner	60/35.6
2,579,049	A	12/1951	Price	60/39.35
2,873,576	A *	2/1959	Lombard	60/226.3
3,124,933	A	3/1964	Stram, Jr. et al.	60/39.823
3,363,419	A	1/1968	Wilde	60/226
3,462,953	A	8/1969	Wilde et al.	60/226
3,496,725	A *	2/1970	Lipfert et al.	60/204
3,635,577	A *	1/1972	Dee	415/79
4,040,252	A	8/1977	Mosier et al.	60/39.36
4,215,536	A *	8/1980	Rudolph	60/262
4,286,431	A	9/1981	Reichard et al.	60/39.823
4,786,347	A	11/1988	Angus	416/198 A
4,969,326	A	11/1990	Blessing et al.	60/226.1
5,014,508	A	5/1991	Lifka	60/224
5,224,339	A *	7/1993	Hayes	60/39.43
5,241,815	A *	9/1993	Lee et al.	60/39.43
5,273,401	A	12/1993	Griffin	416/193 R
6,125,625	A	10/2000	Lipinski et al.	60/39.141
6,374,592	B1 *	4/2002	Box et al.	60/778
6,647,707	B2 *	11/2003	Dev	60/39.43
6,647,732	B2 *	11/2003	Kuo	60/804
6,988,357	B2 *	1/2006	Dev	60/39.43
2006/0096272	A1 *	5/2006	Baughman et al.	60/232

FOREIGN PATENT DOCUMENTS

EP	0 568 748 A1	4/1992

* cited by examiner

Primary Examiner—Wiiliam H. Rodríguez
(74) *Attorney, Agent, or Firm*—Perman & Green, LLP

(57) **ABSTRACT**

A gas turbine engine comprising a combustion chamber section, a turbine section, and a compressor section. The turbine section surrounds the combustion chamber and the compressor section surrounds the turbine section.
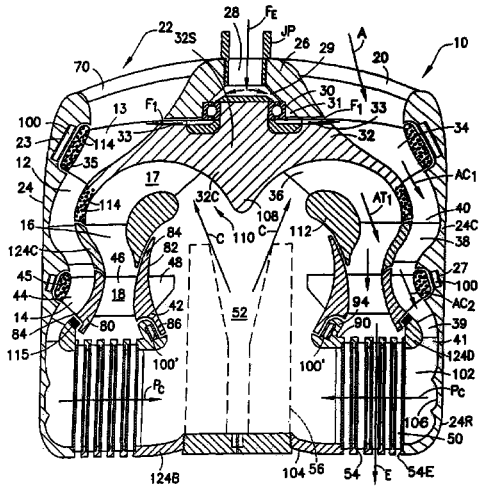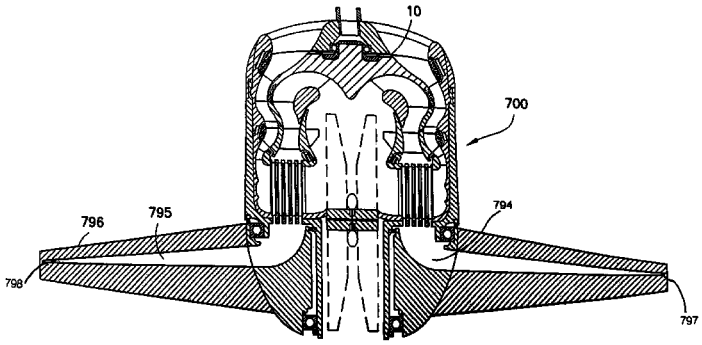
17 Claims, 46 Drawing Sheets