CATHETERIZATION PACKAGE

Filed March 26, 1963 2 Sheets-Sheet 2

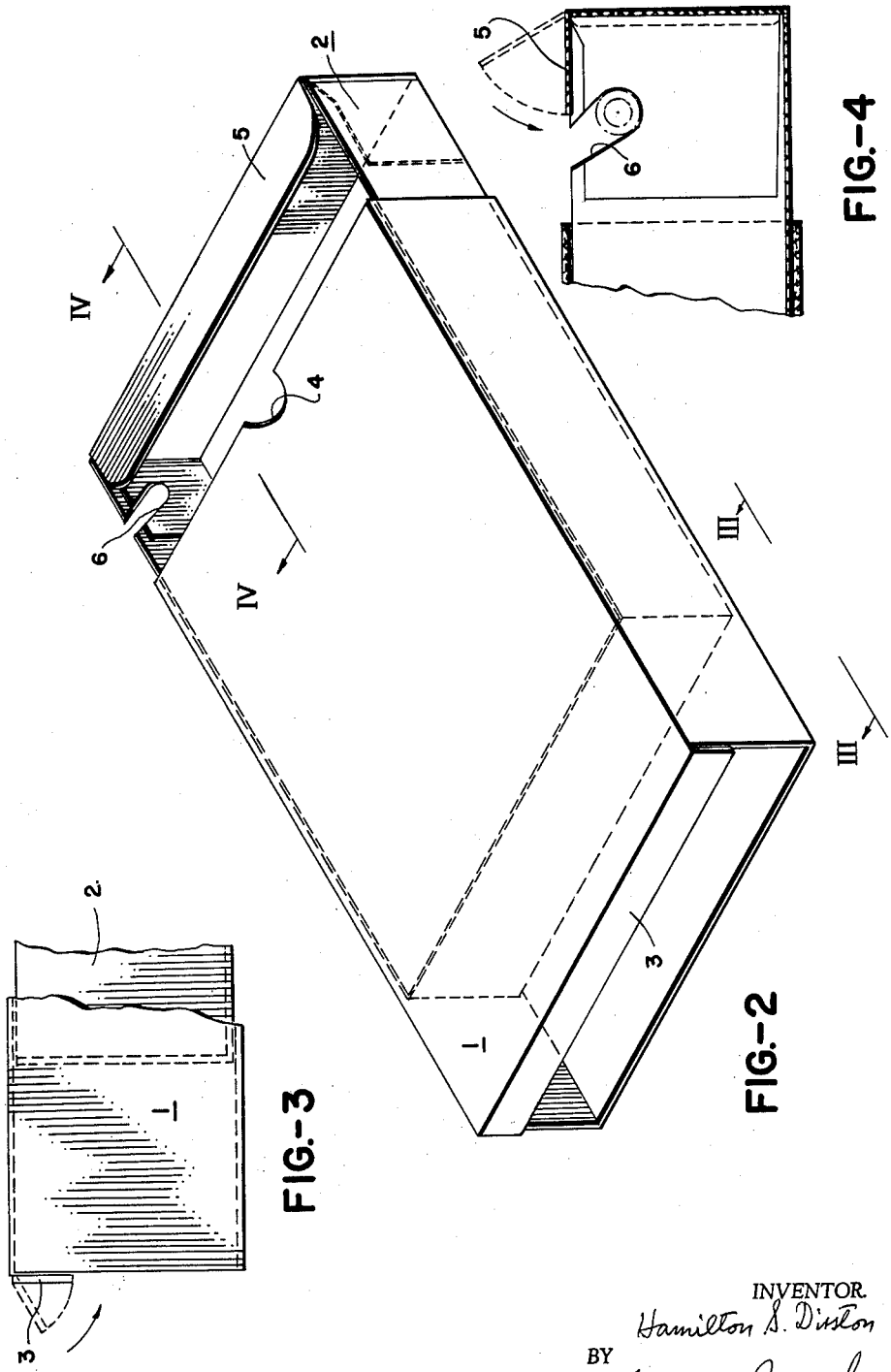

FIG.-2

FIG.-3

FIG.-4

INVENTOR.
Hamilton S. Disston
BY
Brown & Jewett
ATTORNEYS