Jan. 19, 1965 H. S. DISSTON 3,166,189

CATHETERIZATION PACKAGE

Filed March 26, 1963 2 Sheets-Sheet 1

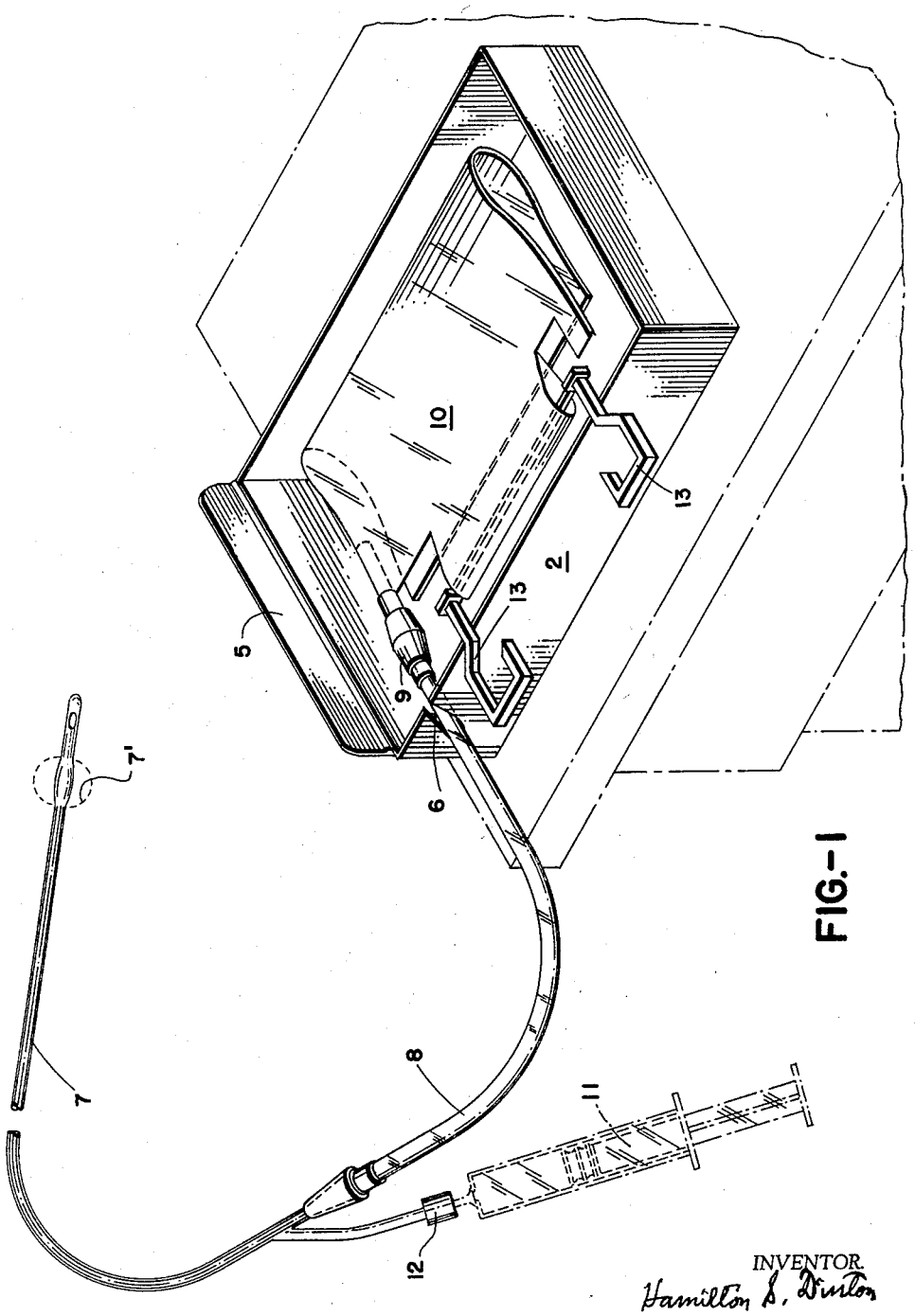

FIG.-1

INVENTOR.
Hamilton S. Disston
BY
Brown & Neward
ATTORNEYS